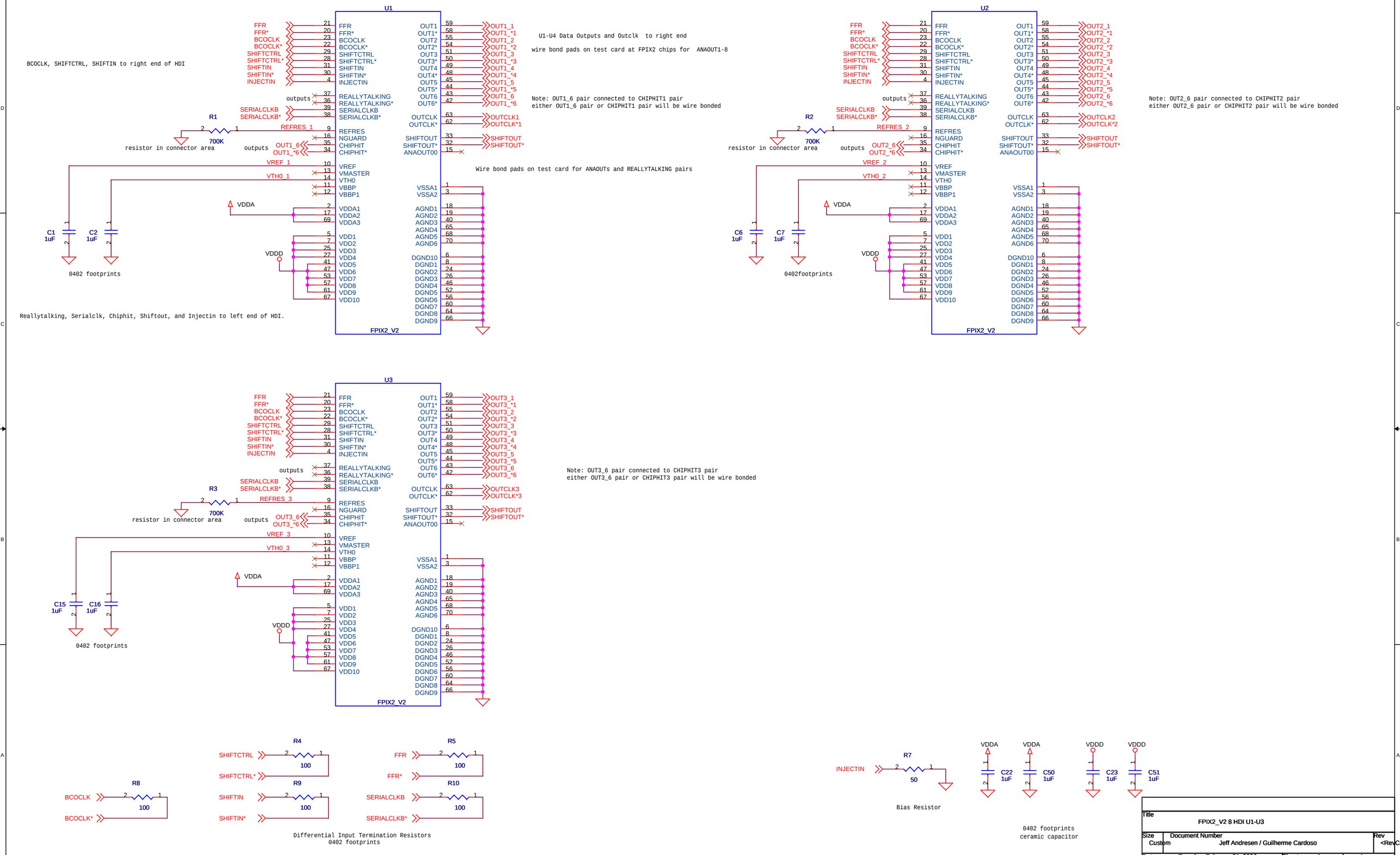
U1
U1-U4 Data Outputs and Outclk to right end
wire bond pads on test card at FPIX2 chips for ANAOUT1-8
BCOCLK, SHIFTCTRL, SHIFTIN to right end of HDI
Note: OUT1_6 pair connected to CHIPHIT1 pair
either OUT1_6 pair or CHIPHIT1 pair will be wire bonded
R1
700K
resistor in connector area
Wire bond pads on test card for ANAOUTs and REALLYTALKING pairs
C1 1uF
C2 1uF
0402 footprints
Reallytalking, Serialclk, Chiphit, Shiftout, and Injectin to left end of HDI.
FPIX2_V2
U2
Note: OUT2_6 pair connected to CHIPHIT2 pair
either OUT2_6 pair or CHIPHIT2 pair will be wire bonded
R2
700K
resistor in connector area
C6 1uF
C7 1uF
0402footprints
FPIX2_V2
U3
Note: OUT3_6 pair connected to CHIPHIT3 pair
either OUT3_6 pair or CHIPHIT3 pair will be wire bonded
R3
700K
resistor in connector area
C15 1uF
C16 1uF
0402 footprints
FPIX2_V2
R4
R5
R8
R9
R10
100
Differential Input Termination Resistors
0402 footprints
R7
50
Bias Resistor
C22 1uF
C50 1uF
C23 1uF
C51 1uF
0402 footprints
ceramic capacitor
Title
FPIX2_V2 8 HDI U1-U3
Size
Custom
Document Number
Jeff Andresen / Guilherme Cardoso
Rev
<RevCo
Date: Tuesday, February 21, 2006
Sheet 1 of 4

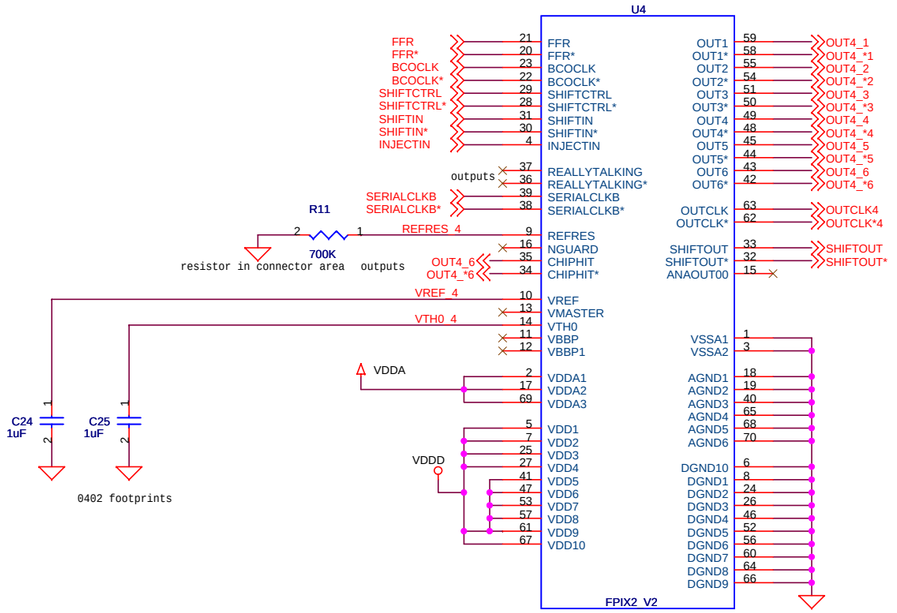

Note: OUT4_6 pair connected to CHIPHIT4 pair
either OUT4_6 pair or CHIPHIT4 pair will be wire bonded

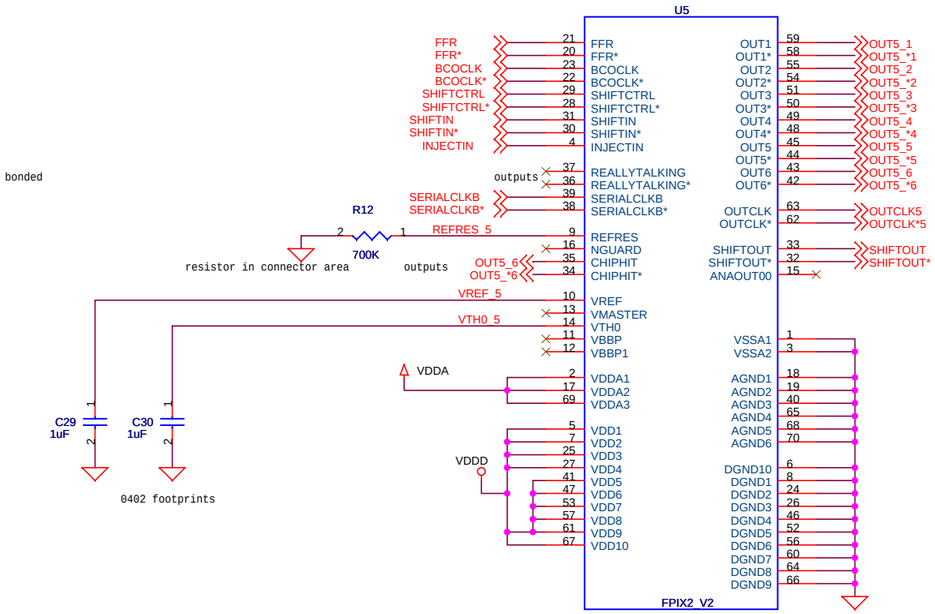

Note: OUT5_6 pair connected to CHIPHIT5 pair

either OUT5_6 pair or CHIPHIT5 pair
will be wire bonded

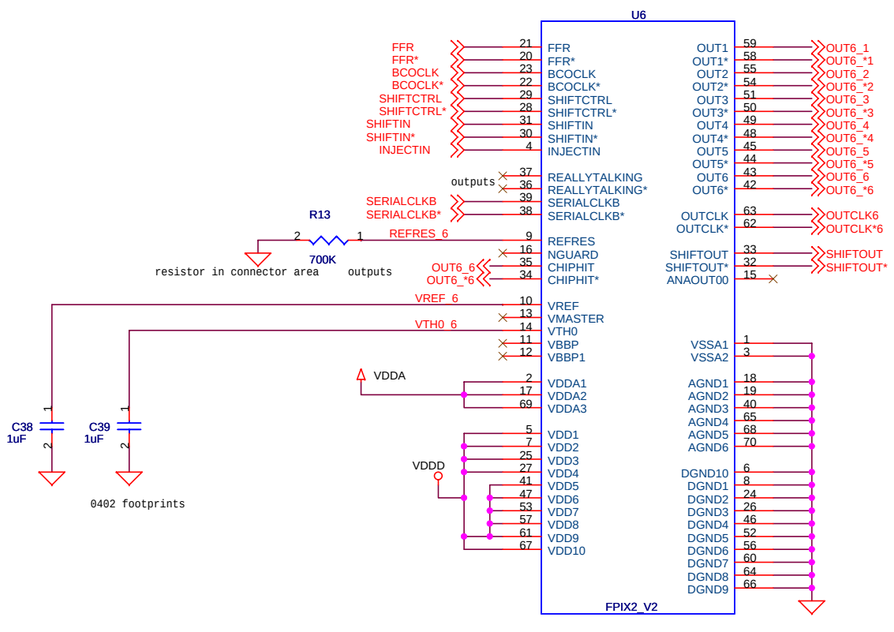

Note: OUT6_6 pair connected to CHIPHIT6 pair
either OUT6_6 pair or CHIPHIT6 pair will be wire bonded

F2
FUDUCIAL HDI

M1 M2 M3
MOIRE MOIRE MOIRE

HDI Flex is 11.1mm wide

Title	FPIX2_V2 8 HDI U4-U6	
Size: Custom	Document Number: Jeff Andresen / Guilherme Cardoso	Rev: <RevC>
Date: Tuesday, February 21, 2006	Sheet 2 of 4	

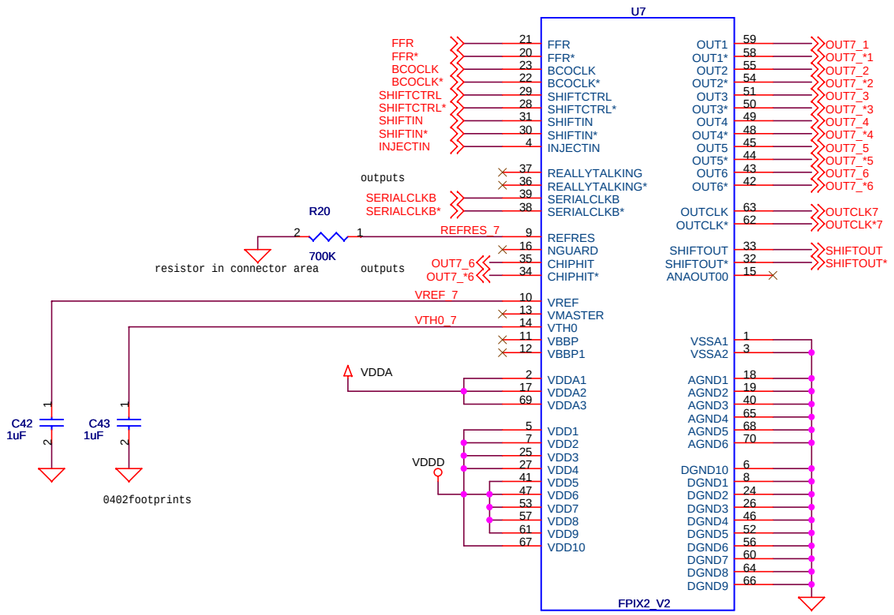

Note: OUT7_6 pair connected to CHIPHIT7 pair
either OUT7_6 pair or CHIPHIT7 pair will be wire bonded

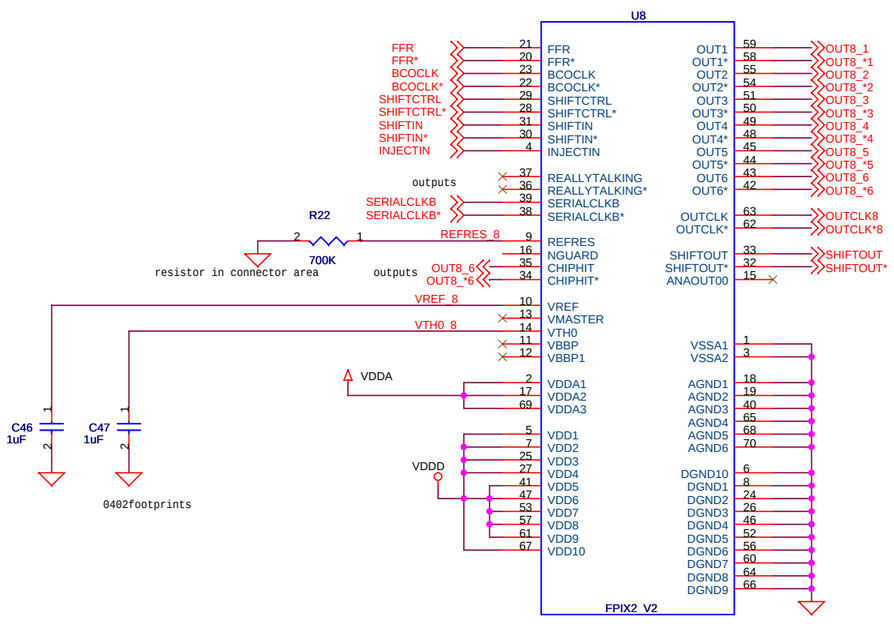

Note: OUT8_6 pair connected to CHIPHIT8 pair
either OUT8_6 pair or CHIPHIT8 pair will be wire bonded

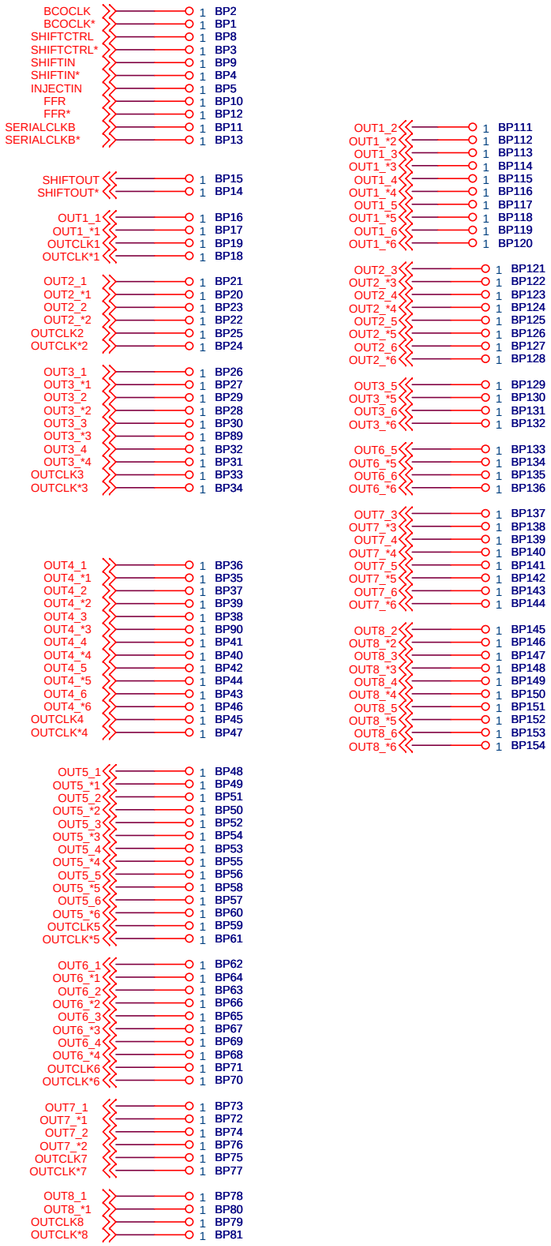

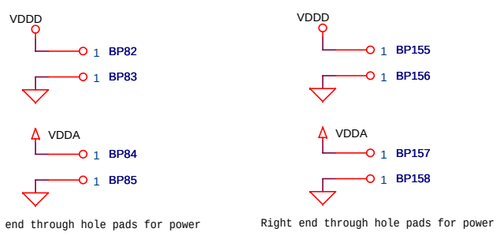

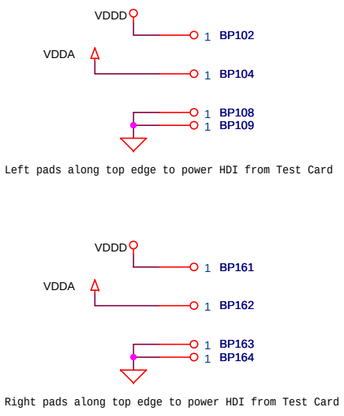

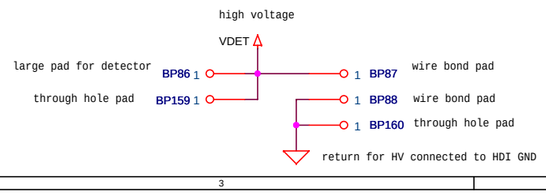

Title	FPIX2_V2 8 HDI U7,U8, Connector		
Size Custom	Document Number	Jeff Andresen / Guilherme Cardoso	Rev <RevCo
Date: Monday, February 20, 2006	Sheet 3 of 4		

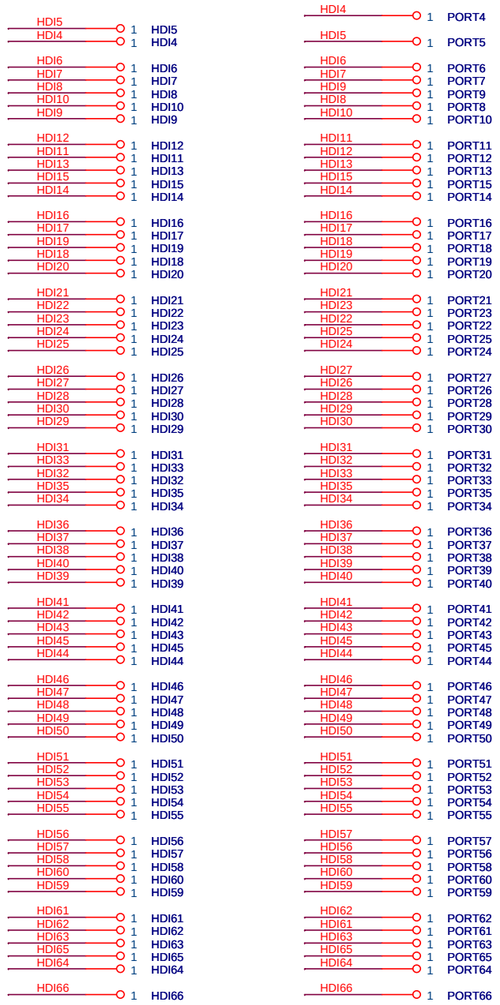

HDI SIGNALS
LEFT TAB

PORTCARD SIGNALS
LEFT TAB

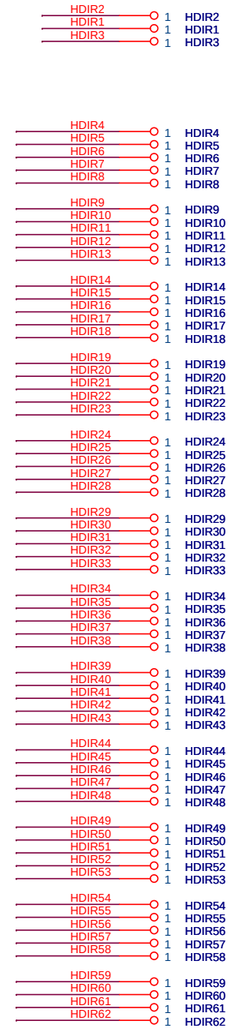

HDI SIGNALS
RIGHT TAB

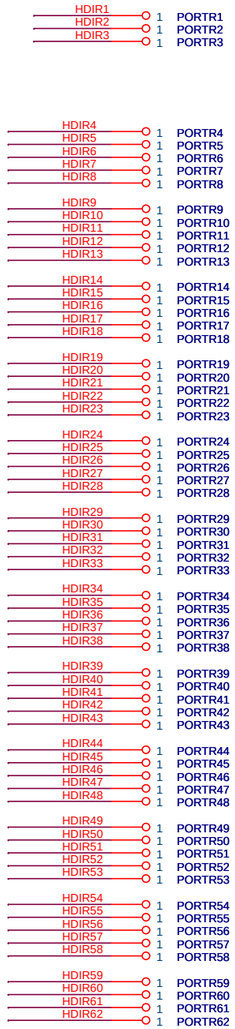

PORTCARD SIGNALS
RIGHT TAB

Title	FPIX2_V2 8 HDI TABS	
Size: Custom	Document Number: Jeff Andresen / Guilherme Cardoso	Rev: <RevCo
Date: Wednesday, February 08, 2006	Sheet 4 of 4	