TS3A24159
0.3-Ω DUAL SPDT ANALOG SWITCH
DUAL-CHANNEL 2:1 MULTIPLEXER/DEMULTIPLEXER

SCDS238C–MARCH 2007–REVISED FEBRUARY 2008

FEATURES

- **Specified Break-Before-Make Switching**
- **Low ON-State Resistance (0.3 Ω Max)**
- **Low Charge Injection**
- **Excellent ON-State Resistance Matching**
- **Low Total Harmonic Distortion (THD)**
- **1.65-V to 3.6-V Single-Supply Operation**
- **Control Inputs Are 1.8-V Logic Compatible**
- **Latch-Up Performance Exceeds 100 mA Per JESD 78, Class II**
- **ESD Performance Tested Per JESD 22**
  - **2000-V Human-Body Model (A114-B, Class II)**
  - **1000-V Charged-Device Model (C101)**

APPLICATIONS

- **Cell Phones**
- **PDAs**
- **Portable Instrumentation**
- **Audio and Video Signal Routing**
- **Low-Voltage Data-Acquisition Systems**
- **Communication Circuits**
- **Modems**
- **Hard Drives**
- **Computer Peripherals**
- **Wireless Terminals and Peripherals**

DGS PACKAGE
(TOP VIEW)

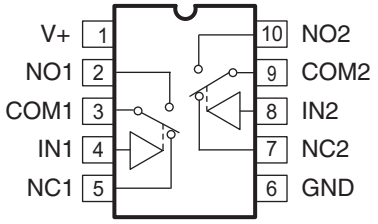

DRC PACKAGE
(TOP VIEW)

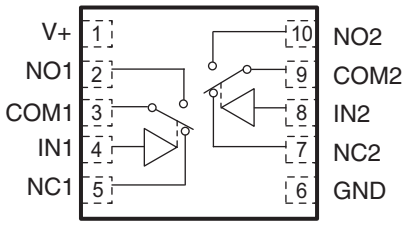

YZP PACKAGE
(TOP-THROUGH VIEW)

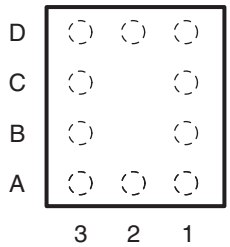

YZP PACKAGE TERMINAL ASSIGNMENTS

D	NO2	V+	NO1
C	COM2		COM1
B	IN2		IN1
A	NC2	GND	NC1
	3	**2**	**1**

DESCRIPTION/ORDERING INFORMATION

The TS3A24159 is a dual single-pole double-throw (SPDT) analog switch that is designed to operate from 1.65 V to 3.6 V. It offers low ON-state resistance and excellent ON-state resistance matching with the break-before-make feature, to prevent signal distortion during the transferring of a signal from one channel to another. The device has excellent total harmonic distortion (THD) performance and consumes very low power. These features make this device suitable for portable audio applications.

Please be aware that an important notice concerning availability, standard warranty, and use in critical applications of Texas Instruments semiconductor products and disclaimers thereto appears at the end of this data sheet.

NanoFree is a trademark of Texas Instruments.

PRODUCTION DATA information is current as of publication date. Products conform to specifications per the terms of the Texas Instruments standard warranty. Production processing does not necessarily include testing of all parameters.

Copyright © 2007–2008, Texas Instruments Incorporated

ORDERING INFORMATION

T_A	PACKAGE (1) (2)		ORDERABLE PART NUMBER	TOP-SIDE MARKING
–40°C to 85°C	NanoFree™ (DSBGA) – YZP	Reel of 3000	TS3A24159YZPR	L87
	VSSOP – DGS (MSOP)	Reel of 2500	TS3A24159DGSR	L8R
	SON – DRC	Reel of 3000	TS3A24159DRCR	ZWS

(1) Package drawings, thermal data, and symbolization are available at www.ti.com/packaging.
(2) For the most current package and ordering information, see the Package Option Addendum at the end of this document, or see the TI website at www.ti.com.

SUMMARY OF CHARACTERISTICS (1)

Configuration	Dual 2:1 Multiplexer/Demultiplexer (2 × SPDT)
Number of channels	2
ON-state resistance (r_{on})	0.3 Ω Max
ON-state resistance match (Δr_{on})	0.05 Ω Max
ON-state resistance flatness ($r_{on(flat)}$)	0.04 Ω Max
Turn-on/turn-off time (t_{ON}/t_{OFF})	20 ns/12 ns
Break-before-make time (t_{BBM})	10 ns
Charge injection (Q_C)	9 pC
Bandwidth (BW)	23 MHz
OFF isolation (O_{ISO})	–72 dB
Crosstalk (X_{TALK})	–96 dB
Total harmonic distortion (THD)	0.003%
Power-supply current (I+)	15 nA
Package options	10-pin MSOP, SON, DSBGA

(1) V+ = 2.7 V, T_A = 25°C

FUNCTION TABLE

IN	NC TO COM, COM TO NC	NO TO COM, COM TO NO
L	ON	OFF
H	OFF	ON

Copyright © 2007–2008, Texas Instruments Incorporated

ABSOLUTE MAXIMUM RATINGS[(1)(2)]

over operating free-air temperature range (unless otherwise noted)

			MIN	MAX	UNIT
V+	Supply voltage range[(3)]		–0.5	3.6	V
V_{NC} V_{NO} V_{COM}	Analog voltage range[(3)(4)(5)]		–0.5	V+ + 0.5	V
$I_{I/OK}$	Analog port diode current	V_{NC}, V_{NO}, V_{COM} < 0	–50	50	mA
I_{NC} I_{NO} I_{COM}	ON-state switch current	V_{NC}, V_{NO}, V_{COM} = 0 to V+	–300	300	mA
	ON-state peak switch current[(6)]		–500	500	
V_I	Digital input voltage range		–0.5	3.6	V
I_{IK}	Digital input clamp current[(3)(4)]	V_I < 0	–50		mA
I+	Continuous current through V+			100	mA
I_{GND}	Continuous current through GND		–100		mA
θ_{JA}	Package thermal impedance[(7)]	DGS package		165	°C/W
		DRC package		56.5	
		YZP package		93	
T_{stg}	Storage temperature range		–65	150	°C

(1) Stresses beyond those listed under "absolute maximum ratings" may cause permanent damage to the device. These are stress ratings only, and functional operation of the device at these or any other conditions beyond those indicated under "recommended operating conditions" is not implied. Exposure to absolute-maximum-rated conditions for extended periods may affect device reliability.
(2) The algebraic convention, whereby the most negative value is a minimum and the most positive value is a maximum
(3) All voltages are with respect to ground, unless otherwise specified.
(4) The input and output voltage ratings may be exceeded if the input and output clamp-current ratings are observed.
(5) This value is limited to 5.5 V maximum.
(6) Pulse at 1-ms duration <10% duty cycle
(7) The package thermal impedance is calculated in accordance with JESD 51-7.

Copyright © 2007–2008, Texas Instruments Incorporated

ELECTRICAL CHARACTERISTICS FOR 3-V SUPPLY(1)

V+ = 2.7 V to 3.6 V, T_A = –40°C to 85°C (unless otherwise noted)

PARAMETER	SYMBOL	TEST CONDITIONS		T_A	V+	MIN	TYP	MAX	UNIT
Analog Switch									
Analog signal range	V_{COM}, V_{NO}, V_{NC}					0		V+	V
Peak ON resistance	r_{peak}	0 ≤ (V_{NO} or V_{NC}) ≤ V+, I_{COM} = –100 mA,	Switch ON, See Figure 10	25°C	2.7 V		0.2	0.3	Ω
				Full				0.35	
ON-state resistance	r_{on}	V_{NO} or V_{NC} = 2 V, I_{COM} = –100 mA,	Switch ON, See Figure 10	25°C	2.7 V		0.26	0.3	Ω
				Full				0.34	
ON-state resistance match between channels	Δr_{on}	V_{NO} or V_{NC} = 2 V, 0.8 V, I_{COM} = –100 mA,	Switch ON, See Figure 10	25°C	2.7 V		0.01	0.05	Ω
				Full				0.05	
ON-state resistance flatness	$r_{on(flat)}$	0 ≤ (V_{NO} or V_{NC}) ≤ V+, I_{COM} = –100 mA,	Switch ON, See Figure 10	25°C	2.7 V		0.13		Ω
		V_{NO} or V_{NC} = 2 V, 0.8 V, I_{COM} = –100 mA,	Switch ON, See Figure 10	25°C			0.01	0.04	Ω
				Full				0.05	
NC, NO OFF leakage current	$I_{NC(OFF)}$, $I_{NO(OFF)}$	V_{NC} or V_{NO} = 1 V, V_{COM} = 3 V, or V_{NC} or V_{NO} = 3 V, V_{COM} = 1 V,	Switch OFF, See Figure 11	25°C	3.6 V	–10		10	nA
				Full		–50		50	
NC, NO ON leakage current	$I_{NC(ON)}$, $I_{NO(ON)}$	V_{NC} or V_{NO} = 1 V, V_{COM} = Open, or V_{NC} or V_{NO} = 3 V, V_{COM} = Open,	Switch ON, See Figure 12	25°C	3.6 V	–10		10	nA
				Full		–100		100	
COM ON leakage current	$I_{COM(ON)}$	V_{NC} or V_{NO} = Open, V_{COM} = 1 V, or V_{NC} or V_{NO} = Open, V_{COM} = 3 V,	Switch ON, See Figure 12	25°C	3.6 V	–10		10	nA
				Full		–100		100	
Digital Control Inputs (IN1, IN2)(2)									
Input logic high	V_{IH}			Full		1.4			V
Input logic low	V_{IL}			Full				0.5	V
Input leakage current	I_{IH}, I_{IL}	V_I = 3.6 V or 0		25°C	3.6 V	–40	5	40	nA
				Full		–50		50	

(1) The algebraic convention, whereby the most negative value is a minimum and the most positive value is a maximum
(2) All unused digital inputs of the device must be held at V+ or GND to ensure proper device operation. Refer to the TI application report, *Implications of Slow or Floating CMOS Inputs*, literature number SCBA004.

Copyright © 2007–2008, Texas Instruments Incorporated

ELECTRICAL CHARACTERISTICS FOR 3-V SUPPLY (continued)

V+ = 2.7 V to 3.6 V, T_A = –40°C to 85°C (unless otherwise noted)

PARAMETER	SYMBOL	TEST CONDITIONS		T_A	V+	MIN	TYP	MAX	UNIT
Dynamic									
Turn-on time	t_{ON}	V_{COM} = V+, R_L = 50 Ω,	C_L = 35 pF, See Figure 14	25°C	3 V		20	35	ns
				Full	2.7 V to 3.6 V			40	
Turn-off time	t_{OFF}	V_{COM} = V+, R_L = 50 Ω,	C_L = 35 pF, See Figure 14	25°C	3 V		12	25	ns
				Full	2.7 V to 3.6 V			30	
Break-before-make time	t_{BBM}	V_{NC} = V_{NO} = V+, R_L = 50 Ω,	C_L = 35 pF, See Figure 15	25°C	3 V	1	10	25	ns
				Full	2.7 V to 3.6 V	0.5		30	
Charge injection	Q_C	V_{GEN} = 0, R_{GEN} = 0,	C_L = 1 nF, See Figure 19	25°C	3 V		9		pC
NC, NO OFF capacitance	$C_{NC(OFF)}$, $C_{NO(OFF)}$	V_{NC} or V_{NO} = V+ or GND, Switch OFF,	See Figure 13	25°C	3 V		90		pF
NC, NO ON capacitance	$C_{NC(ON)}$, $C_{NO(ON)}$	V_{NC} or V_{NO} = V+ or GND, Switch ON,	See Figure 13	25°C	3 V		224		pF
COM ON capacitance	$C_{COM(ON)}$	V_{COM} = V+ or GND, Switch ON,	See Figure 13	25°C	3 V		250		pF
Digital input capacitance	C_I	V_I = V+ or GND,	See Figure 13	25°C	3 V		2		pF
Bandwidth	BW	R_L = 50 Ω, Switch ON,	See Figure 16	25°C	3 V		23		MHz
OFF isolation	O_{ISO}	R_L = 50 Ω, f = 1 MHz,	See Figure 17	25°C	3 V		–72		dB
Crosstalk	X_{TALK}	R_L = 50 Ω, f = 1 MHz,	See Figure 18	25°C	3 V		–96		dB
Total harmonic distortion	THD	R_L = 600 Ω, C_L = 50 pF,	f = 20 Hz to 20 kHz, See Figure 20	25°C	3 V		0.003		%
Supply									
Positive supply current	I+	V_I = V+ or GND		25°C	3.6 V		15	100	nA
				Full			1		µA

ELECTRICAL CHARACTERISTICS FOR 2.5-V SUPPLY(1)

V+ = 2.3 V to 2.7 V, T_A = –40°C to 85°C (unless otherwise noted)

PARAMETER	SYMBOL	TEST CONDITIONS		T_A	V+	MIN	TYP	MAX	UNIT
Analog Switch									
Analog signal range	V_{COM}, V_{NO}, V_{NC}					0		V+	V
Peak ON resistance	r_{peak}	0 ≤ (V_{NO} or V_{NC}) ≤ V+, I_{COM} = –8 mA,	Switch ON, See Figure 10	25°C	2.3 V			0.35	Ω
				Full				0.45	
ON-state resistance	r_{on}	V_{NO} or V_{NC} = 1.8 V, I_{COM} = –8 mA,	Switch ON, See Figure 10	25°C	2.3 V				Ω
				Full				0.4	
ON-state resistance match between channels	Δr_{on}	V_{NO} or V_{NC} = 1.8 V, 0.8 V, I_{COM} = –8 mA,	Switch ON, See Figure 10	25°C	2.3 V		0.01	0.05	Ω
				Full			0.05	0.05	
ON-state resistance flatness	$r_{on(flat)}$	0 ≤ (V_{NO} or V_{NC}) ≤ V+, I_{COM} = –8 mA,	Switch ON, See Figure 10	25°C	2.3 V		0.05		Ω
		V_{NO} or V_{NC} = 0.8 V, 1.8 V, I_{COM} = –8 mA,	Switch ON, See Figure 10	25°C			0.03	0.08	
				Full				0.1	
NC, NO OFF leakage current	$I_{NC(OFF)}$, $I_{NO(OFF)}$	V_{NC} or V_{NO} = 0.5 V, V_{COM} = 2.2 V, or V_{NC} or V_{NO} = 2.2 V, V_{COM} = 0.5 V,	Switch OFF, See Figure 11	25°C	2.7 V	–10		10	nA
				Full		–50		50	
NC, NO ON leakage current	$I_{NC(ON)}$, $I_{NO(ON)}$	V_{NC} or V_{NO} = 0.5 V, V_{COM} = Open, or V_{NC} or V_{NO} = 2.2 V, V_{COM} = Open,	Switch ON, See Figure 12	25°C	2.7 V	–10		10	nA
				Full		–100		100	
COM ON leakage current	$I_{COM(ON)}$	V_{NC} or V_{NO} = Open, V_{COM} = 0.5 V, or V_{NC} or V_{NO} = Open, V_{COM} = 2.2 V,	Switch ON, See Figure 12	25°C	2.7 V	–10		10	nA
				Full		–100		100	
Digital Control Inputs (IN1, IN2)(2)									
Input logic high	V_{IH}			Full		1.25			V
Input logic low	V_{IL}			Full				0.5	V
Input leakage current	I_{IH}, I_{IL}	V_I = 2.7 V or 0		25°C	2.7 V	–40	5	40	nA
				Full		–50		50	

(1) The algebraic convention, whereby the most negative value is a minimum and the most positive value is a maximum.
(2) All unused digital inputs of the device must be held at V+ or GND to ensure proper device operation. Refer to the TI application report, *Implications of Slow or Floating CMOS Inputs*, literature number SCBA004.

Copyright © 2007–2008, Texas Instruments Incorporated

ELECTRICAL CHARACTERISTICS FOR 2.5-V SUPPLY (continued)

V+ = 2.3 V to 2.7 V, T_A = –40°C to 85°C (unless otherwise noted)

PARAMETER	SYMBOL	TEST CONDITIONS		T_A	V+	MIN	TYP	MAX	UNIT
Dynamic									
Turn-on time	t_{ON}	V_{COM} = V+, R_L = 50 Ω,	C_L = 35 pF, See Figure 14	25°C	2.5 V		23	45	ns
				Full	2.3 V to 2.7 V			50	
Turn-off time	t_{OFF}	V_{COM} = V+, R_L = 50 Ω,	C_L = 35 pF, See Figure 14	25°C	2.5 V		17	27	ns
				Full	2.3 V to 2.7 V			30	
Break-before-make time	t_{BBM}	V_{NC} = V_{NO} = V+, R_L = 50 Ω,	C_L = 35 pF, See Figure 15	25°C	2.5 V	2	14	30	ns
				Full	2.3 V to 2.7 V	1		35	
Charge injection	Q_C	V_{GEN} = 0, R_{GEN} = 0,	C_L = 1 nF, See Figure 19	25°C	2.5 V		8		pC
NC, NO OFF capacitance	$C_{NC(OFF)}$, $C_{NO(OFF)}$	V_{NC} or V_{NO} = V+ or GND, Switch OFF,	See Figure 13	25°C	2.5 V		90		pF
NC, NO ON capacitance	$C_{NC(ON)}$, $C_{NO(ON)}$	V_{NC} or V_{NO} = V+ or GND, Switch ON,	See Figure 13	25°C	2.5 V		250		pF
COM ON capacitance	$C_{COM(ON)}$	V_{COM} = V+ or GND, Switch ON,	See Figure 13	25°C	2.5 V		250		pF
Digital input capacitance	C_I	V_I = V+ or GND,	See Figure 13	25°C	2.5 V		2		pF
Bandwidth	BW	R_L = 50 Ω, Switch ON,	See Figure 16	25°C	2.5 V		23		MHz
OFF isolation	O_{ISO}	R_L = 50 Ω, f = 1 MHz,	See Figure 17	25°C	2.5 V		–72		dB
Crosstalk	X_{TALK}	R_L = 50 Ω, f = 1 MHz,	See Figure 18	25°C	2.5 V		–96		dB
Total harmonic distortion	THD	R_L = 600 Ω, C_L = 50 pF,	f = 20 Hz to 20 kHz, See Figure 20	25°C	2.5 V		0.003		%
Supply									
Positive supply current	I+	V_I = V+ or GND		25°C	2.7 V		10	100	nA
				Full			700		

Copyright © 2007–2008, Texas Instruments Incorporated

ELECTRICAL CHARACTERISTICS FOR 1.8-V SUPPLY(1)

V+ = 1.65 V to 1.95 V, T_A = –40°C to 85°C (unless otherwise noted)

PARAMETER	SYMBOL	TEST CONDITIONS		T_A	V+	MIN	TYP	MAX	UNIT
Analog Switch									
Analog signal range	V_{COM}, V_{NO}, V_{NC}					0		V+	V
Peak ON resistance	r_{peak}	0 ≤ (V_{NO} or V_{NC}) ≤ V+, I_{COM} = –2 mA,	Switch ON, See Figure 10	25°C	1.65 V		0.4	0.9	Ω
				Full				0.8	
ON-state resistance	r_{on}	V_{NO} or V_{NC} = 1.5 V, I_{COM} = –2 mA,	Switch ON, See Figure 10	25°C	1.65 V		0.3	0.45	Ω
				Full				0.5	
ON-state resistance match between channels	Δr_{on}	V_{NO} or V_{NC} = 0.6 V, 1.5 V, I_{COM} = –2 mA,	Switch ON, See Figure 10	25°C	1.65 V		0.02	0.04	Ω
				Full				0.05	
ON-state resistance flatness	$r_{on(flat)}$	0 ≤ (V_{NO} or V_{NC}) ≤ V+, I_{COM} = –2 mA,	Switch ON, See Figure 10	25°C	1.65 V		0.13		Ω
		V_{NO} or V_{NC} = 0.6 V, 1.5 V, I_{COM} = –8 mA,	Switch ON, See Figure 10	25°C			0.08	0.15	
				Full				0.2	
NC, NO OFF leakage current	$I_{NC(OFF)}$, $I_{NO(OFF)}$	V_{NC} or V_{NO} = 0.3 V, V_{COM} = 1.65 V, or V_{NC} or V_{NO} = 1.65 V, V_{COM} = 0.3 V,	Switch OFF, See Figure 11	25°C	1.95	–10		10	nA
				Full		–50		50	
NC, NO ON leakage current	$I_{NC(ON)}$, $I_{NO(ON)}$	V_{NC} or V_{NO} = 0.3 V, V_{COM} = Open, or V_{NC} or V_{NO} = 1.65 V, V_{COM} = Open,	Switch ON, See Figure 12	25°C	1.95 V	–10		10	nA
				Full		–100		100	
COM ON leakage current	$I_{COM(ON)}$	V_{NC} or V_{NO} = Open, V_{COM} = 0.3 V, or V_{NC} or V_{NO} = Open, V_{COM} = 1.65 V,	Switch ON, See Figure 12	25°C	1.95 V	–10		10	nA
				Full		–100		100	
Digital Control Inputs (IN1, IN2)(2)									
Input logic high	V_{IH}			Full		1			V
Input logic low	V_{IL}			Full				0.4	V
Input leakage current	I_{IH}, I_{IL}	V_I = 1.95 V or 0		25°C	1.95 V	–40	5	40	nA
				Full		–50		50	

(1) The algebraic convention, whereby the most negative value is a minimum and the most positive value is a maximum
(2) All unused digital inputs of the device must be held at V+ or GND to ensure proper device operation. Refer to the TI application report, *Implications of Slow or Floating CMOS Inputs*, literature number SCBA004.

Copyright © 2007–2008, Texas Instruments Incorporated

ELECTRICAL CHARACTERISTICS FOR 1.8-V SUPPLY (continued)

V+ = 1.65 V to 1.95 V, T_A = –40°C to 85°C (unless otherwise noted)

PARAMETER	SYMBOL	TEST CONDITIONS		T_A	V+	MIN	TYP	MAX	UNIT
Dynamic									
Turn-on time	t_{ON}	V_{COM} = V+, R_L = 50 Ω,	C_L = 35 pF, See Figure 14	25°C	1.8 V		53	75	ns
				Full	1.65 V to 1.95 V			30	
Turn-off time	t_{OFF}	V_{COM} = V+, R_L = 50 Ω,	C_L = 35 pF, See Figure 14	25°C	1.8 V		24	35	ns
				Full	1.65 V to 1.95 V			40	
Break-before-make time	t_{BBM}	V_{NC} = V_{NO} = V+, R_L = 50 Ω,	C_L = 35 pF, See Figure 15	25°C	1.8 V	2	30	40	ns
				Full	1.65 V to 1.95 V	1		50	
Charge injection	Q_C	V_{GEN} = 0, R_{GEN} = 0,	C_L = 1 nF, See Figure 19	25°C	1.8 V		5		pC
NC, NO OFF capacitance	$C_{NC(OFF)}$, $C_{NO(OFF)}$	V_{NC} or V_{NO} = V+ or GND, Switch OFF,	See Figure 13	25°C	1.8 V		90		pF
NC, NO ON capacitance	$C_{NC(ON)}$, $C_{NO(ON)}$	V_{NC} or V_{NO} = V+ or GND, Switch ON,	See Figure 13	25°C	1.8 V		250		pF
COM ON capacitance	$C_{COM(ON)}$	V_{COM} = V+ or GND, Switch ON,	See Figure 13	25°C	1.8 V		250		pF
Digital input capacitance	C_I	V_I = V+ or GND,	See Figure 13	25°C	1.8 V		2		pF
Bandwidth	BW	R_L = 50 Ω, Switch ON,	See Figure 16	25°C	1.8 V		23		MHz
OFF isolation	O_{ISO}	R_L = 50 Ω, f = 1 MHz,	See Figure 17	25°C	1.8 V		–73		dB
Crosstalk	X_{TALK}	R_L = 50 Ω, f = 1 MHz,	See Figure 18	25°C	1.8 V		–97		dB
Total harmonic distortion	THD	R_L = 600 Ω, C_L = 50 pF,	f = 20 Hz to 20 kHz, See Figure 20	25°C	1.8 V		0.005		%
Supply									
Positive supply current	I+	V_I = V+ or GND		25°C	1.95 V		100	50	nA
				Full				700	

TYPICAL PERFORMANCE

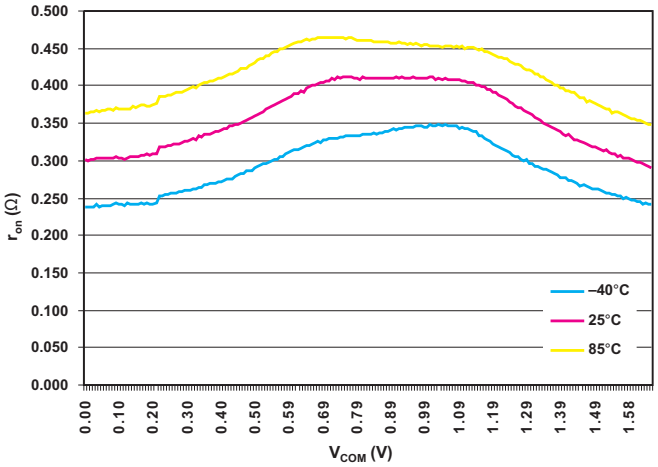

Figure 1. r_{on} vs V_{COM} (V+ = 1.65 V)

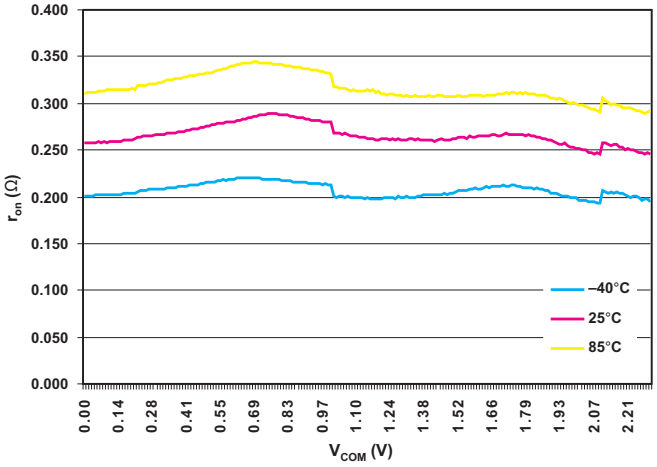

Figure 2. r_{on} vs V_{COM} (V+ = 2.3 V)

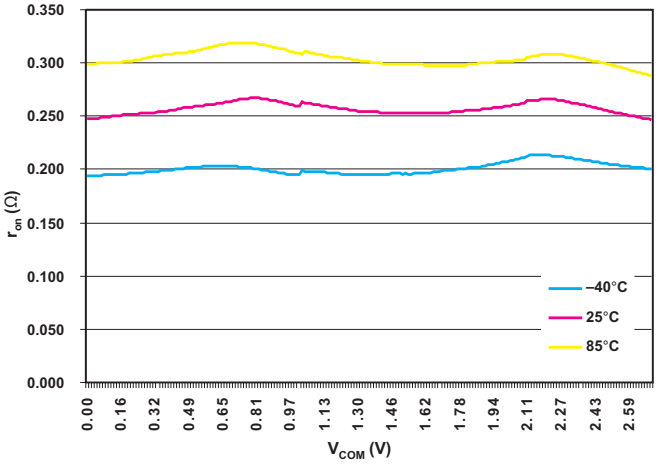

Figure 3. r_{on} vs V_{COM} (V+ = 2.7 V)

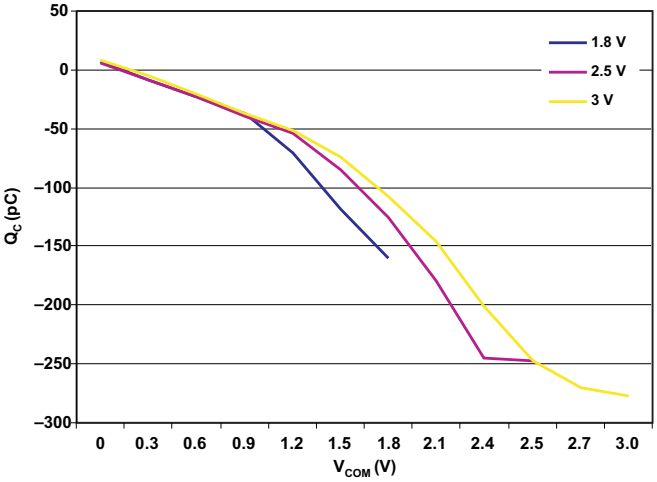

Figure 4. Charge Injection (Q_C) vs V_{COM} (T_A = 25°C)

Copyright © 2007–2008, Texas Instruments Incorporated

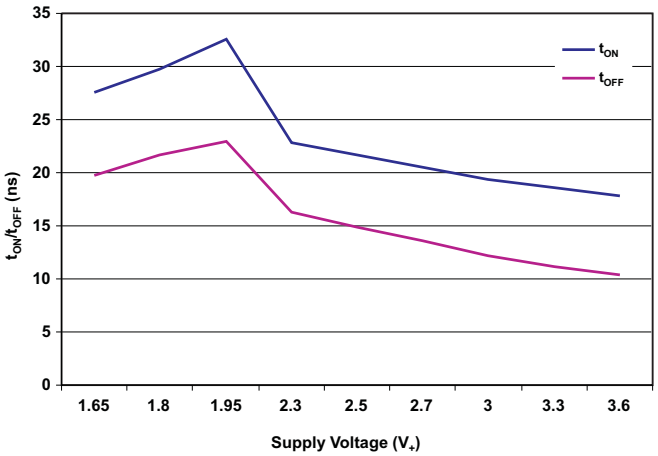

Figure 5. t_{ON} and t_{OFF} vs Supply Voltage (T_A = 25°C)

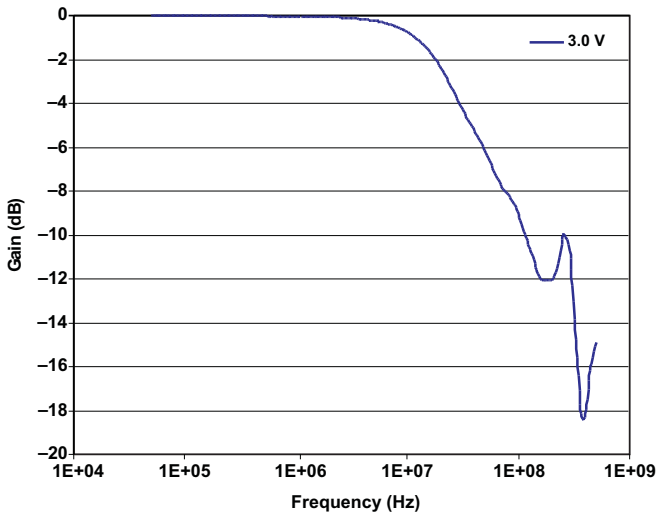

Figure 6. Bandwidth

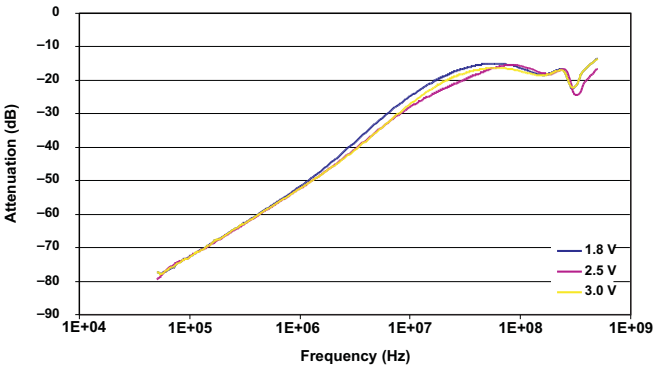

Figure 7. OFF Isolation

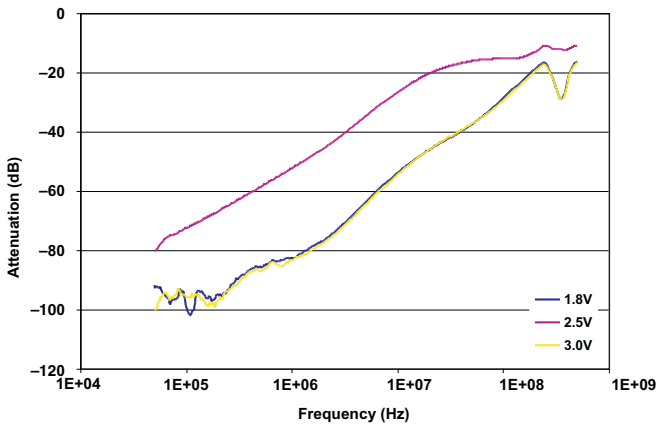

Figure 8. Crosstalk

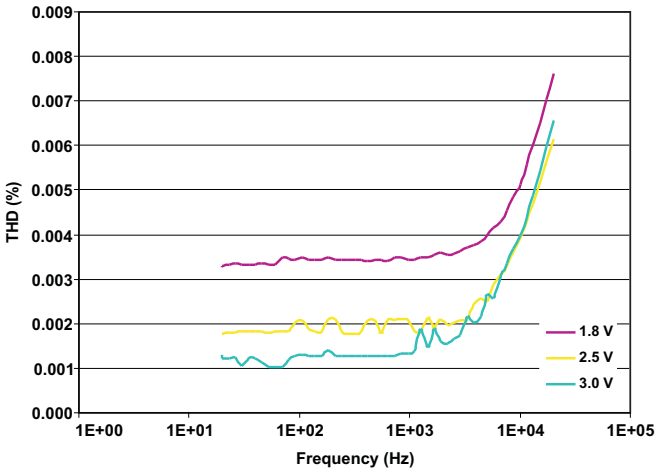

Figure 9. Total Harmonic Distortion vs Frequency

PARAMETER MEASUREMENT INFORMATION

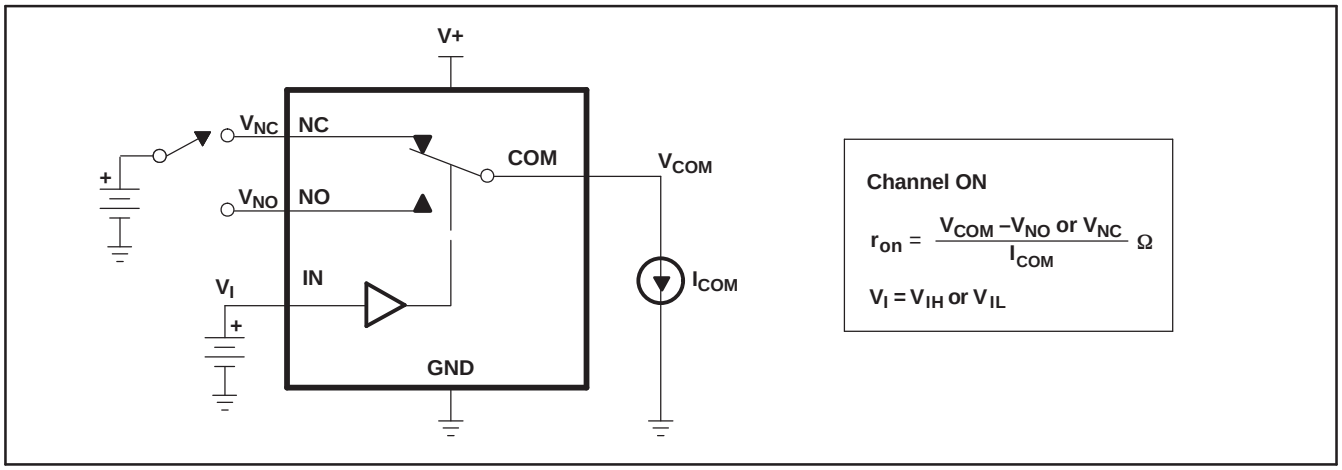

Figure 10. ON-State Resistance

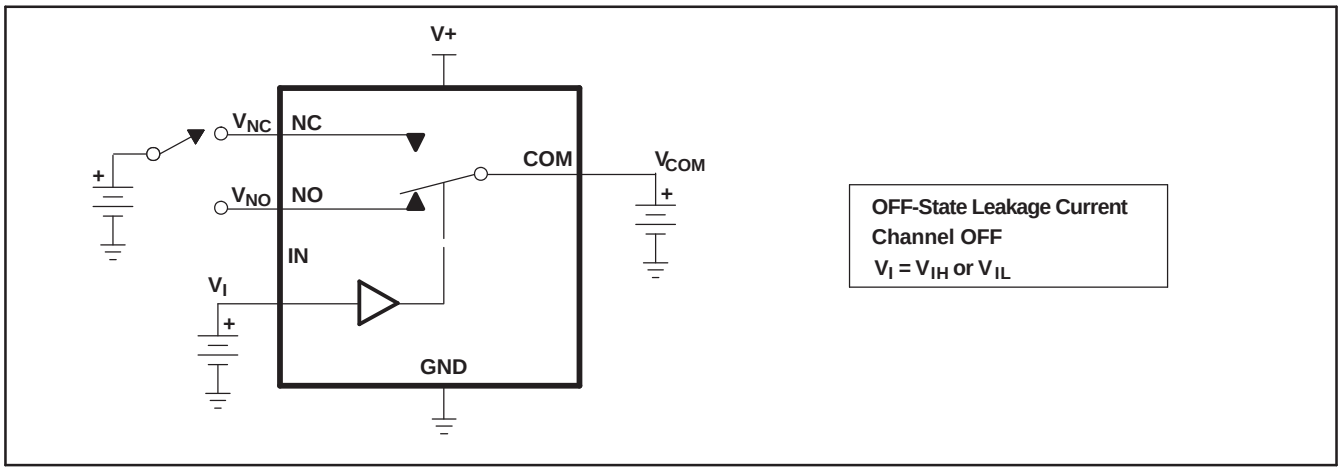

Figure 11. OFF-State Leakage Current
($I_{NC(OFF)}$, $I_{NC(PWROFF)}$, $I_{NO(OFF)}$, $I_{NO(PWROFF)}$, $I_{COM(OFF)}$, $I_{COM(PWROFF)}$)

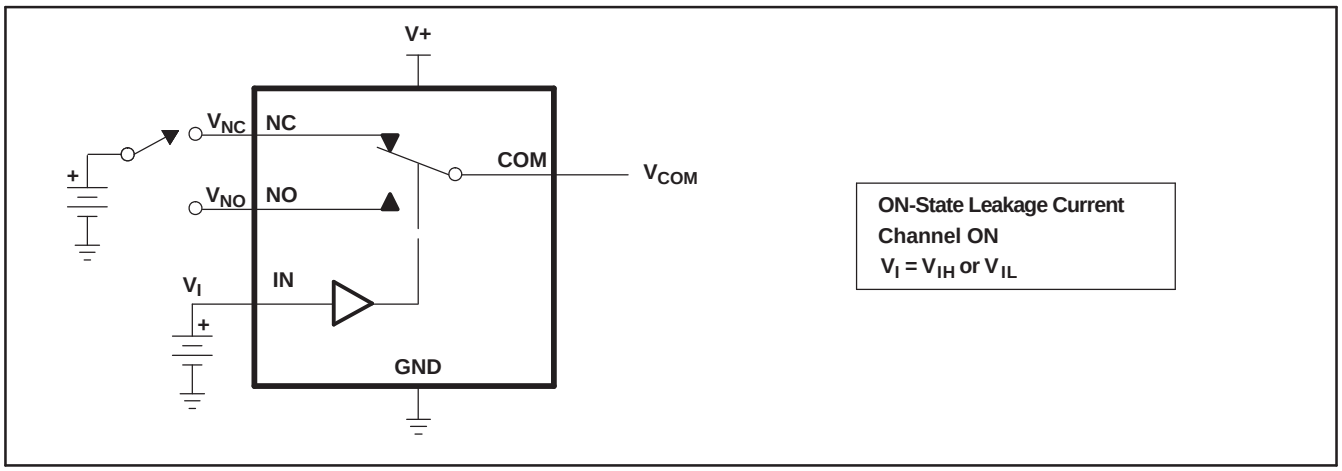

Figure 12. ON-State Leakage Current ($I_{COM(ON)}$, $I_{NC(ON)}$, $I_{NO(ON)}$)

Copyright © 2007–2008, Texas Instruments Incorporated

PARAMETER MEASUREMENT INFORMATION (continued)

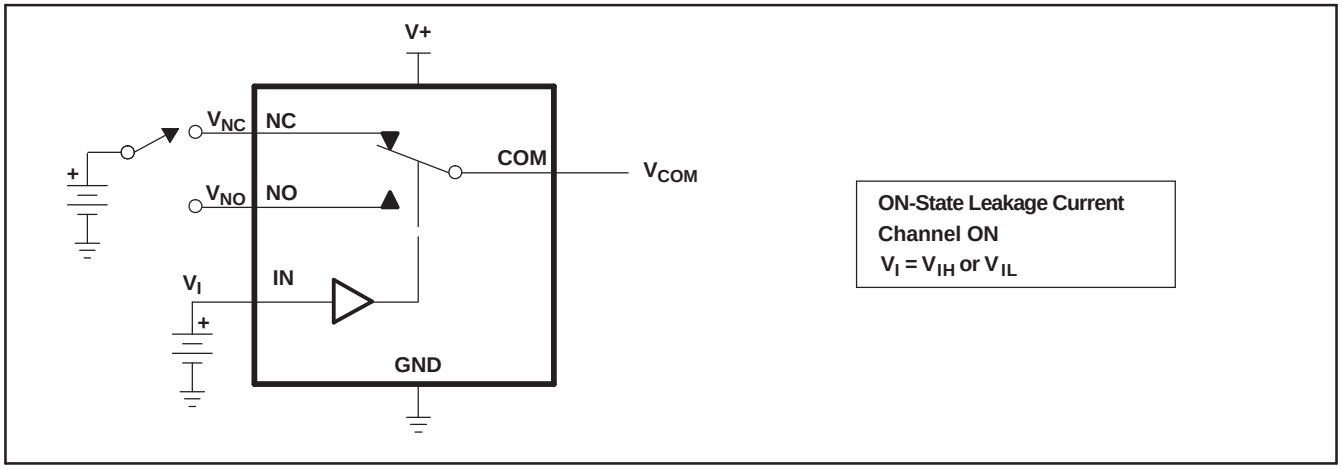

Figure 13. Capacitance (C_I, $C_{NC(OFF)}$, $C_{NO(OFF)}$, $C_{NC(ON)}$, $C_{NO(ON)}$)

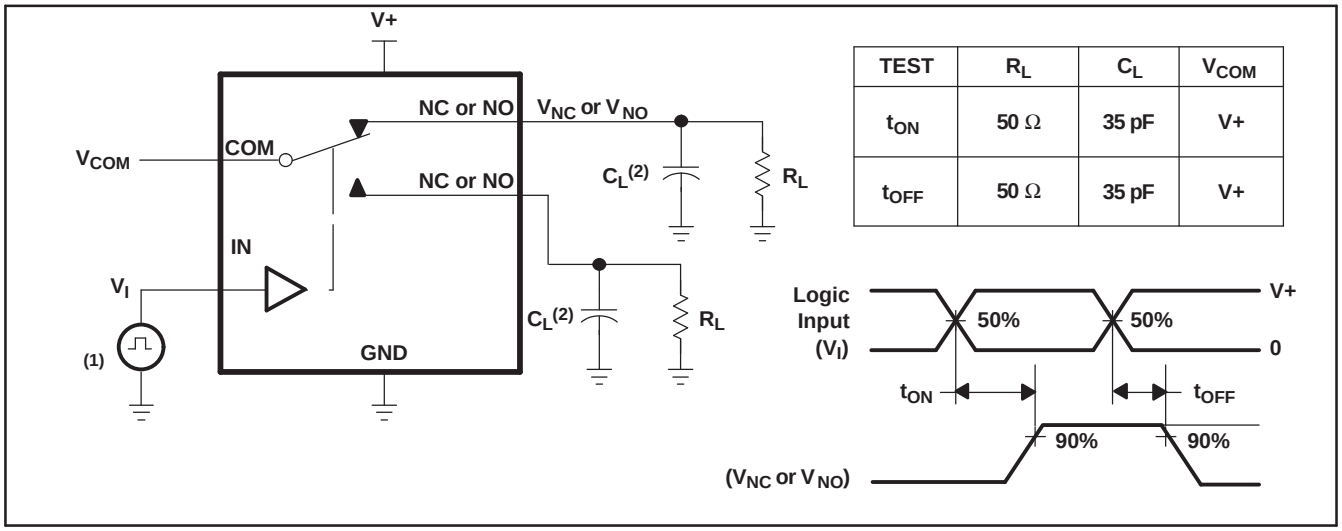

TEST	R_L	C_L	V_{COM}
t_{ON}	50 Ω	35 pF	V+
t_{OFF}	50 Ω	35 pF	V+

(1) All input pulses are supplied by generators having the following characteristics: PRR ≤ 10 MHz, Z_O = 50 Ω, t_r < 5 ns, t_f < 5 ns.

(2) C_L includes probe and jig capacitance.

Figure 14. Turn-On (t_{ON}) and Turn-Off Time (t_{OFF})

PARAMETER MEASUREMENT INFORMATION (continued)

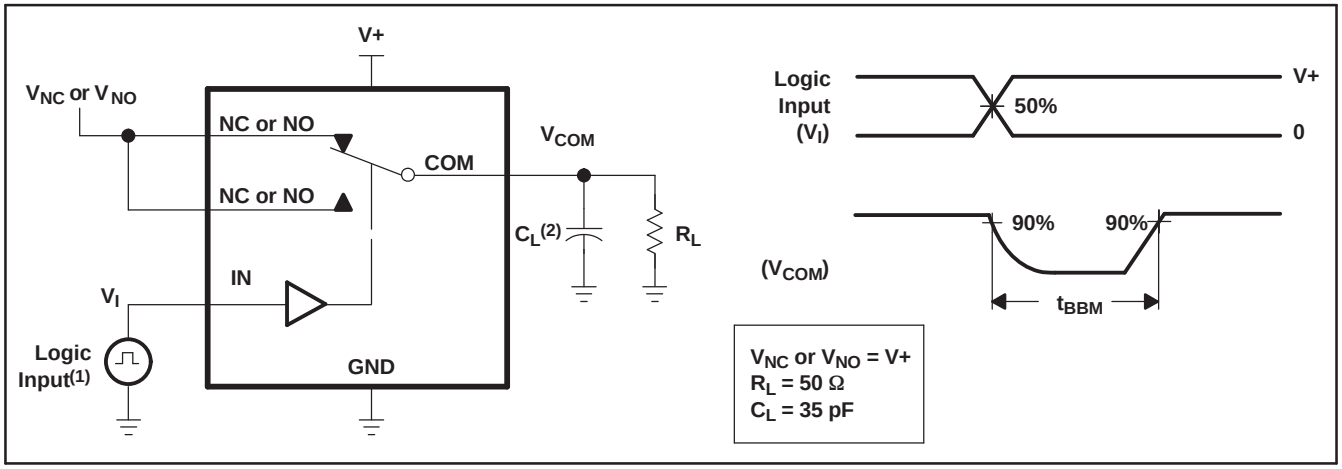

(1) All input pulses are supplied by generators having the following characteristics: PRR ≤ 10 MHz, Z_O = 50 Ω, t_r < 5 ns, t_f < 5 ns.

(2) C_L includes probe and jig capacitance.

Figure 15. Break-Before-Make Time (t_{BBM})

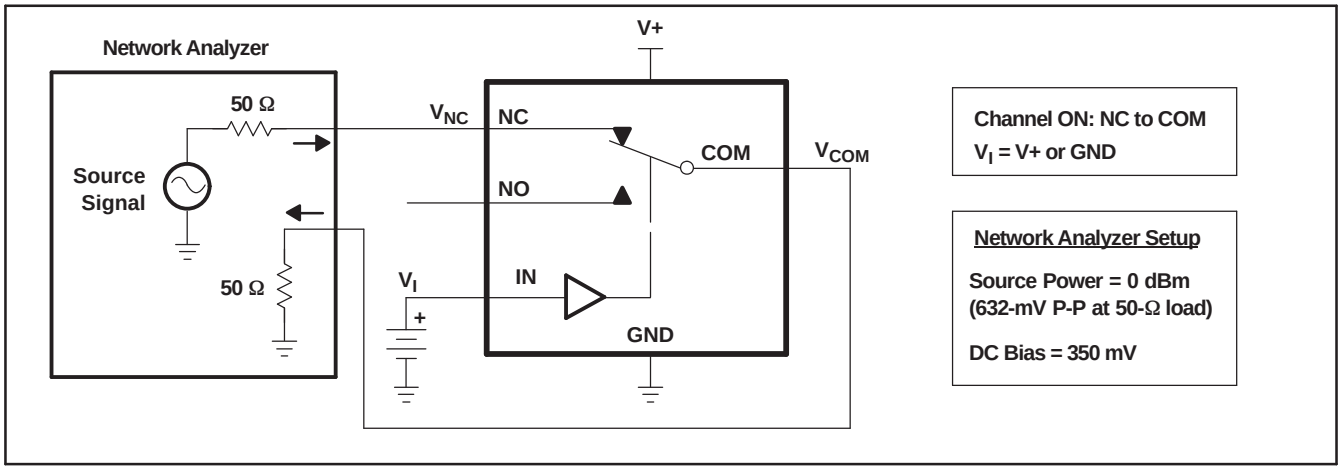

Figure 16. Bandwidth (BW)

Copyright © 2007–2008, Texas Instruments Incorporated

PARAMETER MEASUREMENT INFORMATION (continued)

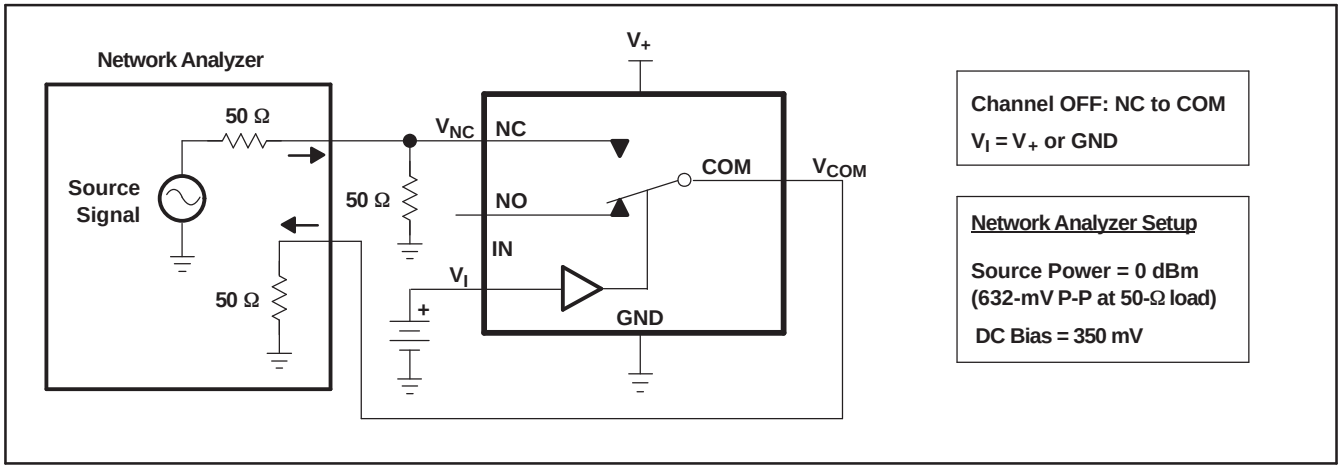

Figure 17. OFF Isolation (O_{ISO})

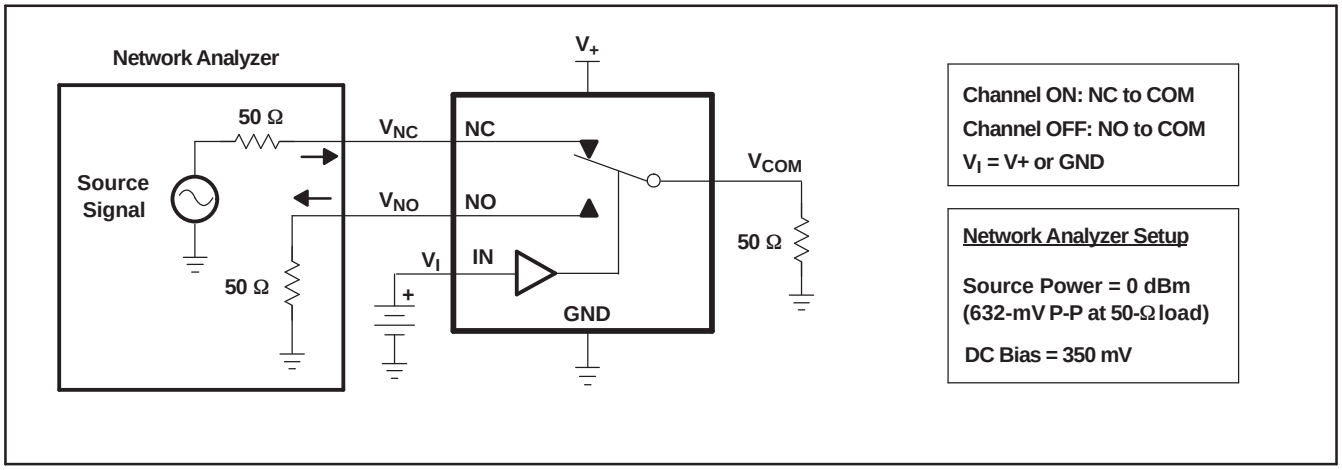

Figure 18. Crosstalk (X_{TALK})

PARAMETER MEASUREMENT INFORMATION (continued)

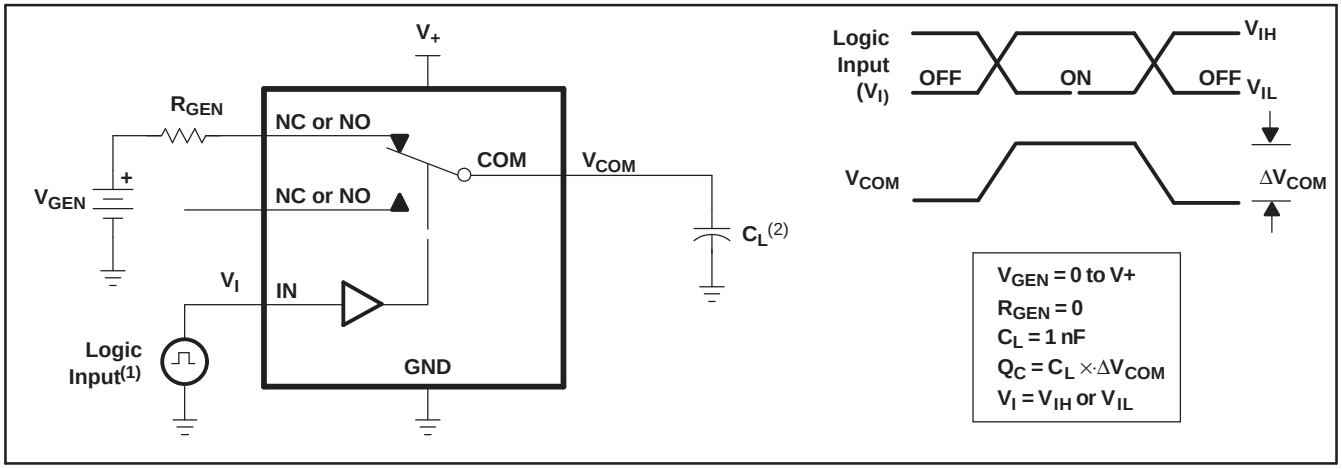

A. All input pulses are supplied by generators having the following characteristics: PRR ≤ 10 MHz, Z_O = 50 Ω, t_r < 5 ns, t_f < 5 ns.

B. C_L includes probe and jig capacitance.

Figure 19. Charge Injection (Q_C)

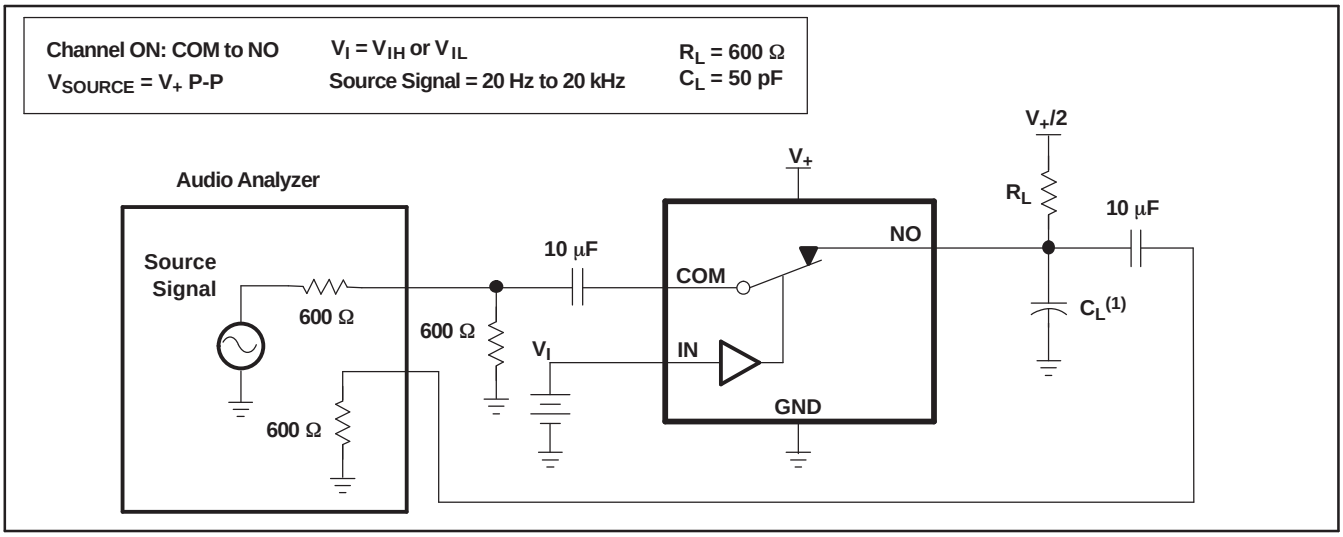

A. C_L includes probe and jig capacitance.

Figure 20. Total Harmonic Distortion (THD)

Copyright © 2007–2008, Texas Instruments Incorporated

PACKAGING INFORMATION

Orderable Device	Status (1)	Package Type	Package Drawing	Pins	Package Qty	Eco Plan (2)	Lead/Ball Finish	MSL Peak Temp (3)	Op Temp (°C)	Device Marking (4/5)	Samples
TS3A24159DGSR	ACTIVE	VSSOP	DGS	10	2500	Green (RoHS & no Sb/Br)	CU NIPDAU	Level-1-260C-UNLIM	-40 to 85	L8R	Samples
TS3A24159DGSRG4	ACTIVE	VSSOP	DGS	10	2500	Green (RoHS & no Sb/Br)	CU NIPDAU	Level-1-260C-UNLIM	-40 to 85	L8R	Samples
TS3A24159DRCR	ACTIVE	SON	DRC	10	3000	Green (RoHS & no Sb/Br)	CU NIPDAU	Level-2-260C-1 YEAR	-40 to 85	ZWS	Samples
TS3A24159DRCRG4	ACTIVE	SON	DRC	10	3000	Green (RoHS & no Sb/Br)	CU NIPDAU	Level-2-260C-1 YEAR	-40 to 85	ZWS	Samples
TS3A24159YZPR	ACTIVE	DSBGA	YZP	10	3000	Green (RoHS & no Sb/Br)	SNAGCU	Level-1-260C-UNLIM	-40 to 85	L87	Samples

(1) The marketing status values are defined as follows:
ACTIVE: Product device recommended for new designs.
LIFEBUY: TI has announced that the device will be discontinued, and a lifetime-buy period is in effect.
NRND: Not recommended for new designs. Device is in production to support existing customers, but TI does not recommend using this part in a new design.
PREVIEW: Device has been announced but is not in production. Samples may or may not be available.
OBSOLETE: TI has discontinued the production of the device.

(2) Eco Plan - The planned eco-friendly classification: Pb-Free (RoHS), Pb-Free (RoHS Exempt), or Green (RoHS & no Sb/Br) - please check http://www.ti.com/productcontent for the latest availability information and additional product content details.
TBD: The Pb-Free/Green conversion plan has not been defined.
Pb-Free (RoHS): TI's terms "Lead-Free" or "Pb-Free" mean semiconductor products that are compatible with the current RoHS requirements for all 6 substances, including the requirement that lead not exceed 0.1% by weight in homogeneous materials. Where designed to be soldered at high temperatures, TI Pb-Free products are suitable for use in specified lead-free processes.
Pb-Free (RoHS Exempt): This component has a RoHS exemption for either 1) lead-based flip-chip solder bumps used between the die and package, or 2) lead-based die adhesive used between the die and leadframe. The component is otherwise considered Pb-Free (RoHS compatible) as defined above.
Green (RoHS & no Sb/Br): TI defines "Green" to mean Pb-Free (RoHS compatible), and free of Bromine (Br) and Antimony (Sb) based flame retardants (Br or Sb do not exceed 0.1% by weight in homogeneous material)

(3) MSL, Peak Temp. -- The Moisture Sensitivity Level rating according to the JEDEC industry standard classifications, and peak solder temperature.

(4) There may be additional marking, which relates to the logo, the lot trace code information, or the environmental category on the device.

(5) Multiple Device Markings will be inside parentheses. Only one Device Marking contained in parentheses and separated by a "~" will appear on a device. If a line is indented then it is a continuation of the previous line and the two combined represent the entire Device Marking for that device.

Important Information and Disclaimer: The information provided on this page represents TI's knowledge and belief as of the date that it is provided. TI bases its knowledge and belief on information provided by third parties, and makes no representation or warranty as to the accuracy of such information. Efforts are underway to better integrate information from third parties. TI has taken and continues to take reasonable steps to provide representative and accurate information but may not have conducted destructive testing or chemical analysis on incoming materials and chemicals. TI and TI suppliers consider certain information to be proprietary, and thus CAS numbers and other limited information may not be available for release.

In no event shall TI's liability arising out of such information exceed the total purchase price of the TI part(s) at issue in this document sold by TI to Customer on an annual basis.

TAPE AND REEL INFORMATION

REEL DIMENSIONS

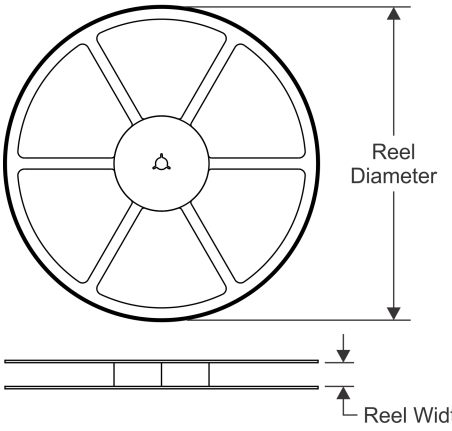

TAPE DIMENSIONS

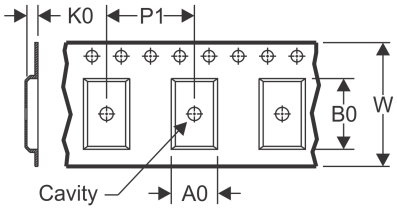

A0	Dimension designed to accommodate the component width
B0	Dimension designed to accommodate the component length
K0	Dimension designed to accommodate the component thickness
W	Overall width of the carrier tape
P1	Pitch between successive cavity centers

QUADRANT ASSIGNMENTS FOR PIN 1 ORIENTATION IN TAPE

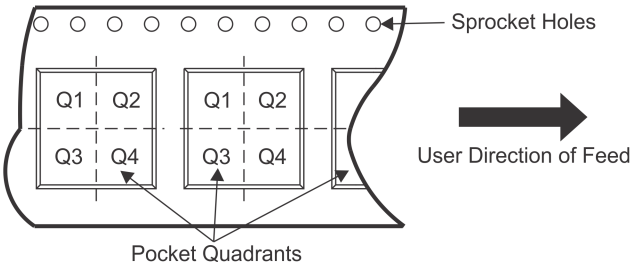

*All dimensions are nominal

Device	Package Type	Package Drawing	Pins	SPQ	Reel Diameter (mm)	Reel Width W1 (mm)	A0 (mm)	B0 (mm)	K0 (mm)	P1 (mm)	W (mm)	Pin1 Quadrant
TS3A24159DGSR	VSSOP	DGS	10	2500	330.0	12.4	5.3	3.4	1.4	8.0	12.0	Q1
TS3A24159DRCR	SON	DRC	10	3000	330.0	12.4	3.3	3.3	1.1	8.0	12.0	Q2
TS3A24159YZPR	DSBGA	YZP	10	3000	180.0	8.4	1.5	2.03	0.7	4.0	8.0	Q2

TAPE AND REEL BOX DIMENSIONS

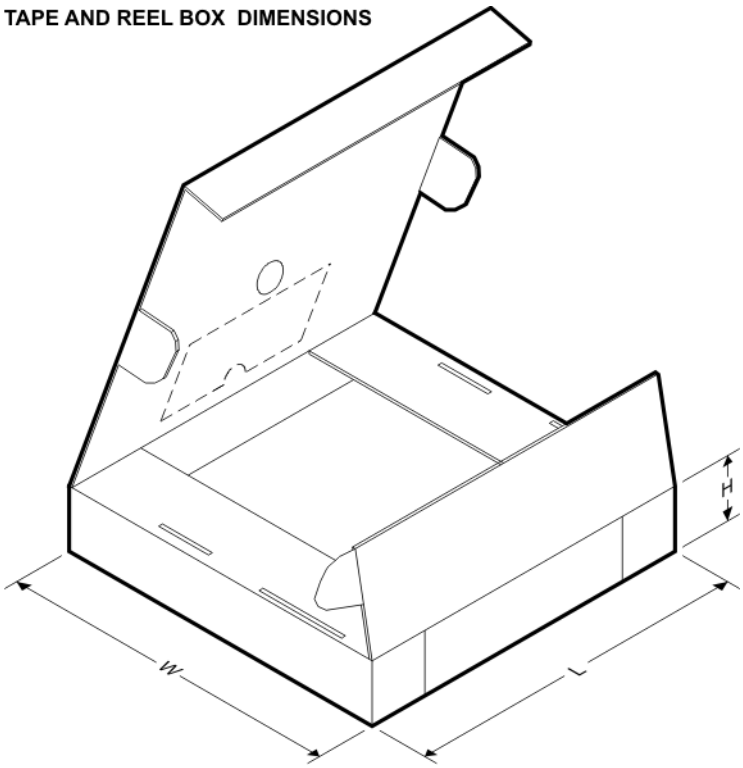

*All dimensions are nominal

Device	Package Type	Package Drawing	Pins	SPQ	Length (mm)	Width (mm)	Height (mm)
TS3A24159DGSR	VSSOP	DGS	10	2500	358.0	335.0	35.0
TS3A24159DRCR	SON	DRC	10	3000	367.0	367.0	35.0
TS3A24159YZPR	DSBGA	YZP	10	3000	220.0	220.0	34.0

DGS (S–PDSO–G10) PLASTIC SMALL–OUTLINE PACKAGE

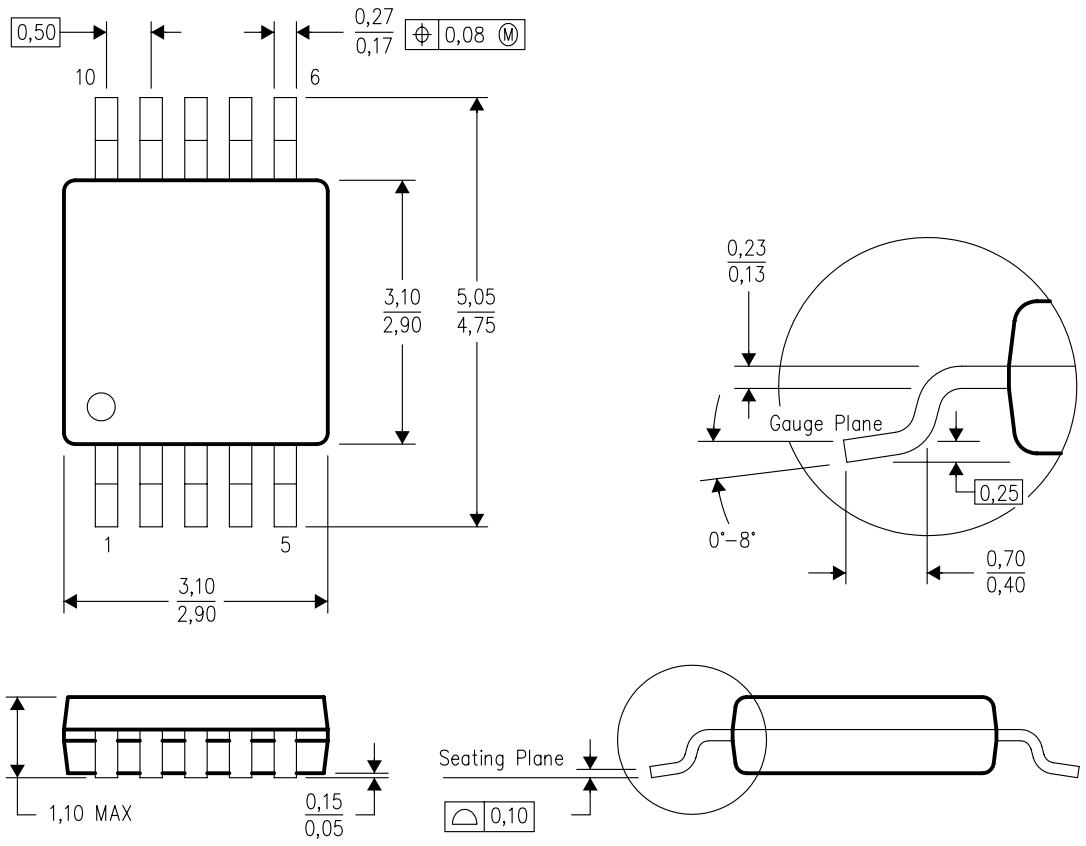

4073272/C 02/04

NOTES:
A. All linear dimensions are in millimeters.
B. This drawing is subject to change without notice.
C. Body dimensions do not include mold flash or protrusion.
D. Falls within JEDEC MO–187 variation BA.

DRC (S-PVSON-N10) PLASTIC SMALL OUTLINE NO-LEAD

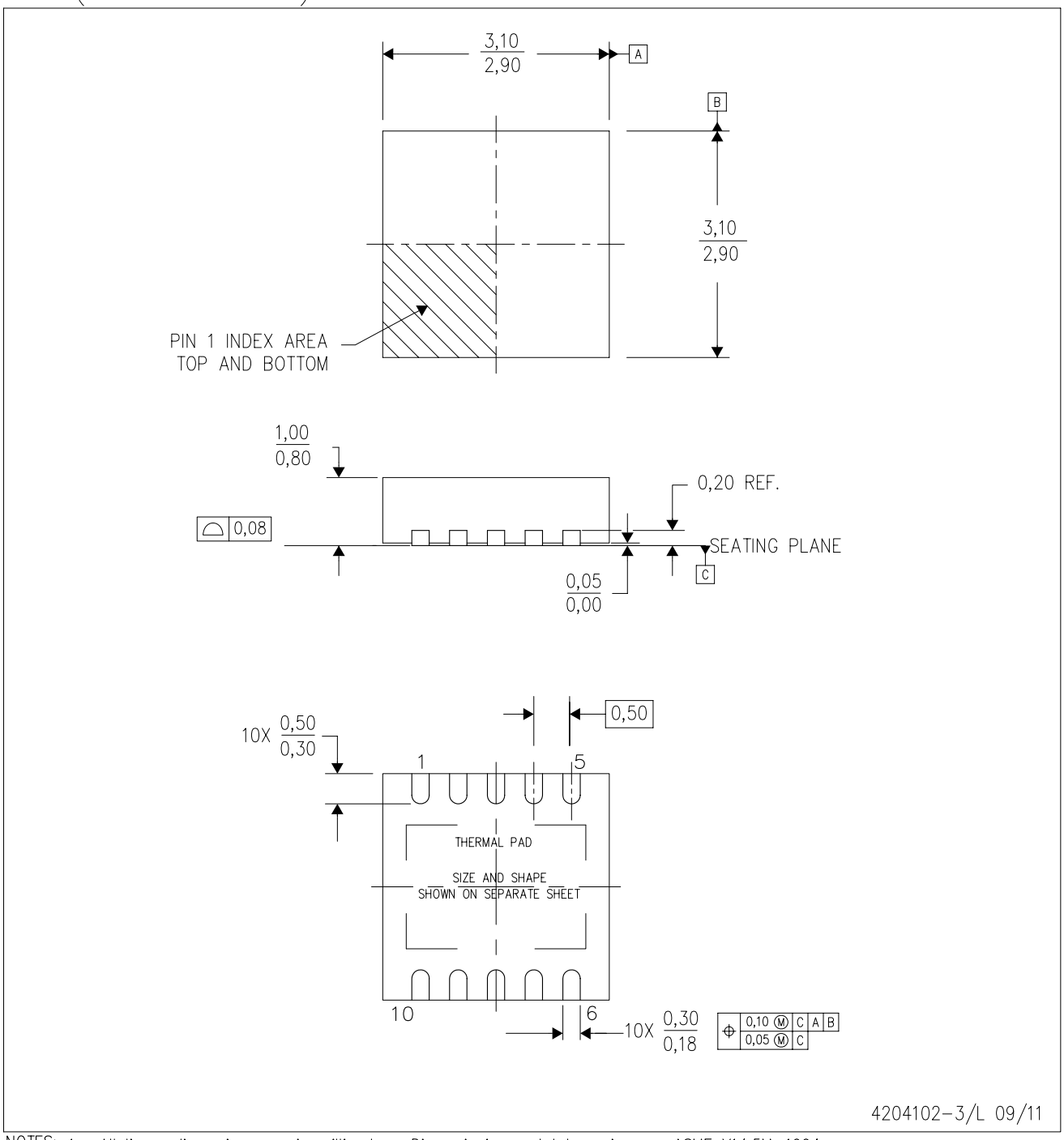

NOTES:
A. All linear dimensions are in millimeters. Dimensioning and tolerancing per ASME Y14.5M-1994.
B. This drawing is subject to change without notice.
C. Small Outline No-Lead (SON) package configuration.
D. The package thermal pad must be soldered to the board for thermal and mechanical performance, if present.
E. See the additional figure in the Product Data Sheet for details regarding the exposed thermal pad features and dimensions, if present

DRC (S–PVSON–N10) PLASTIC SMALL OUTLINE NO–LEAD

THERMAL INFORMATION

This package incorporates an exposed thermal pad that is designed to be attached directly to an external heatsink. The thermal pad must be soldered directly to the printed circuit board (PCB). After soldering, the PCB can be used as a heatsink. In addition, through the use of thermal vias, the thermal pad can be attached directly to the appropriate copper plane shown in the electrical schematic for the device, or alternatively, can be attached to a special heatsink structure designed into the PCB. This design optimizes the heat transfer from the integrated circuit (IC).

For information on the Quad Flatpack No–Lead (QFN) package and its advantages, refer to Application Report, QFN/SON PCB Attachment, Texas Instruments Literature No. SLUA271. This document is available at www.ti.com.

The exposed thermal pad dimensions for this package are shown in the following illustration.

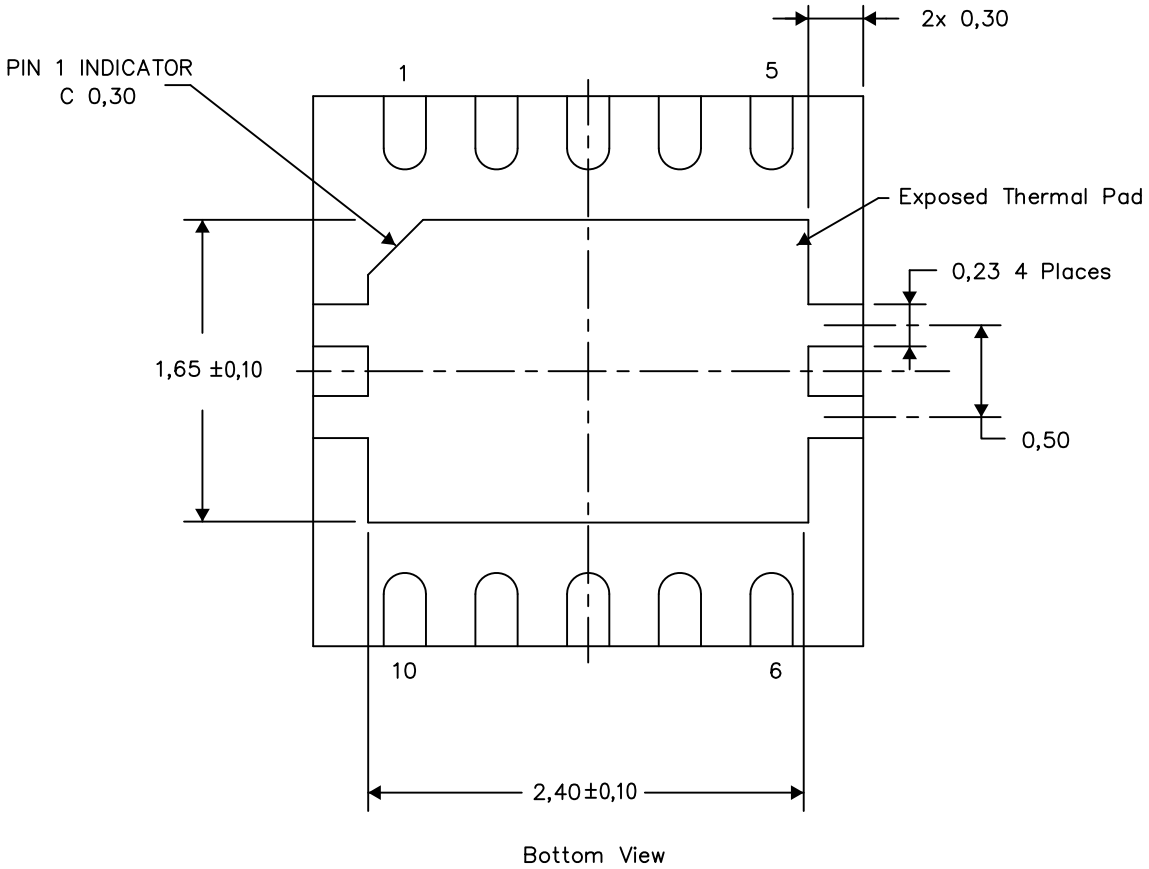

Exposed Thermal Pad Dimensions

4206565–3/R 03/13

NOTE: A. All linear dimensions are in millimeters

DRC (S–PVSON–N10) PLASTIC SMALL OUTLINE NO–LEAD

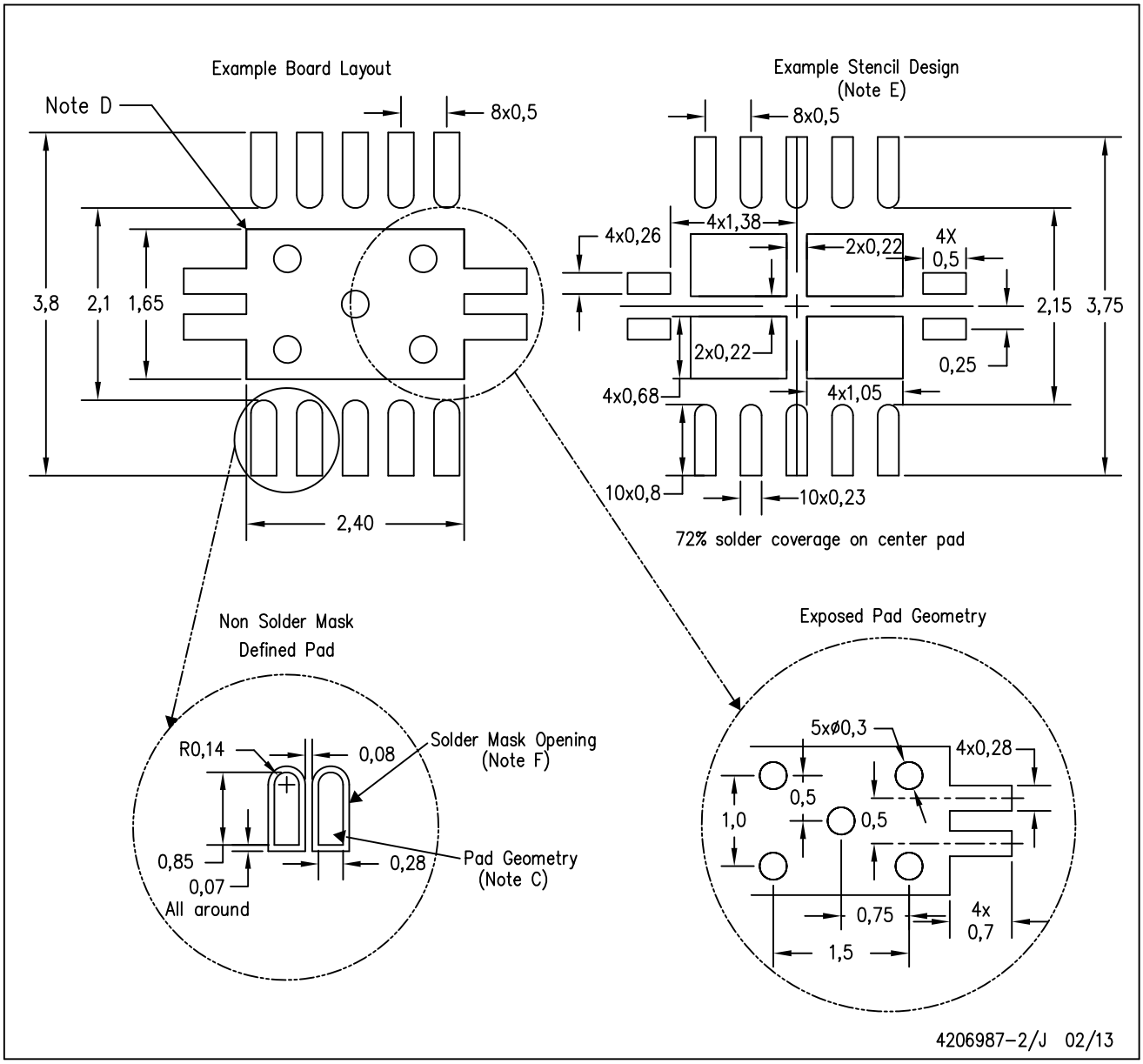

NOTES:
A. All linear dimensions are in millimeters.
B. This drawing is subject to change without notice.
C. Publication IPC–7351 is recommended for alternate designs.
D. This package is designed to be soldered to a thermal pad on the board. Refer to Application Note, Quad Flat–Pack Packages, Texas Instruments Literature No. SLUA271, and also the Product Data Sheets for specific thermal information, via requirements, and recommended board layout. These documents are available at www.ti.com <http://www.ti.com>.
E. Laser cutting apertures with trapezoidal walls and also rounding corners will offer better paste release. Customers should contact their board assembly site for stencil design recommendations. Refer to IPC 7525 for stencil design considerations.
F. Customers should contact their board fabrication site for minimum solder mask web tolerances between signal pads.

YZP (R–XBGA–N10) (CUSTOM) DIE–SIZE BALL GRID ARRAY

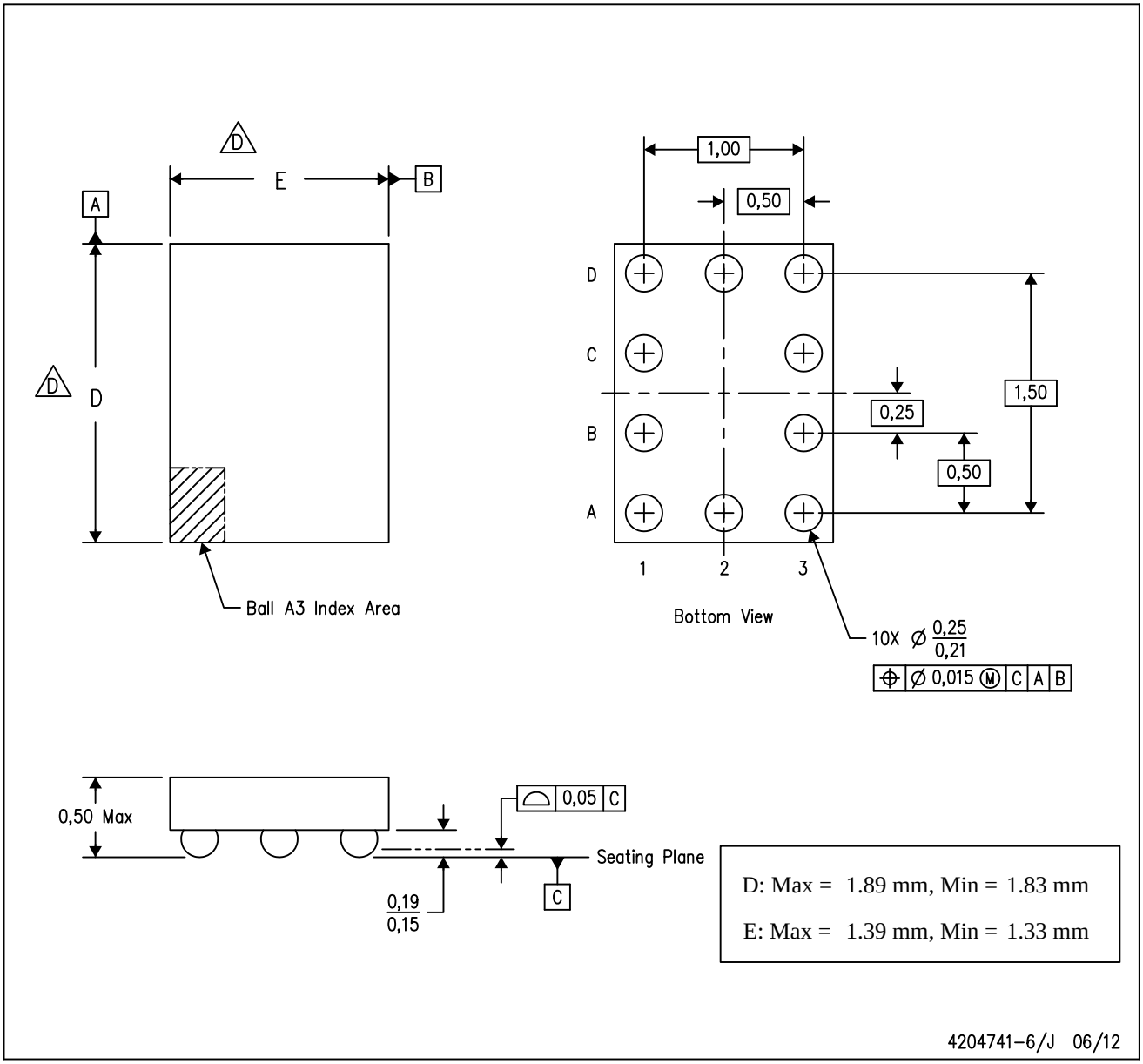

NOTES:
- A. All linear dimensions are in millimeters. Dimensioning and tolerancing per ASME Y14.5M–1994.
- B. This drawing is subject to change without notice.
- C. NanoFree™ package configuration.
- D. The package size (Dimension D and E) of a particular device is specified in the device Product Data Sheet version of this drawing, in case it cannot be found in the product data sheet please contact a local TI representative.
- E. This package is a Pb–free solder ball design.

NanoFree is a trademark of Texas Instruments.

PACKAGING INFORMATION

Orderable Device	Status (1)	Package Type	Package Drawing	Pins	Package Qty	Eco Plan (2)	Lead/Ball Finish	MSL Peak Temp (3)	Op Temp (°C)	Device Marking (4/5)	Samples
TS3A24159DGSR	ACTIVE	VSSOP	DGS	10	2500	Green (RoHS & no Sb/Br)	CU NIPDAU	Level-1-260C-UNLIM	-40 to 85	L8R	Samples
TS3A24159DGSRG4	ACTIVE	VSSOP	DGS	10	2500	Green (RoHS & no Sb/Br)	CU NIPDAU	Level-1-260C-UNLIM	-40 to 85	L8R	Samples
TS3A24159DRCR	ACTIVE	SON	DRC	10	3000	Green (RoHS & no Sb/Br)	CU NIPDAU	Level-2-260C-1 YEAR	-40 to 85	ZWS	Samples
TS3A24159DRCRG4	ACTIVE	SON	DRC	10	3000	Green (RoHS & no Sb/Br)	CU NIPDAU	Level-2-260C-1 YEAR	-40 to 85	ZWS	Samples
TS3A24159YZPR	ACTIVE	DSBGA	YZP	10	3000	Green (RoHS & no Sb/Br)	SNAGCU	Level-1-260C-UNLIM	-40 to 85	L87	Samples

(1) The marketing status values are defined as follows:
ACTIVE: Product device recommended for new designs.
LIFEBUY: TI has announced that the device will be discontinued, and a lifetime-buy period is in effect.
NRND: Not recommended for new designs. Device is in production to support existing customers, but TI does not recommend using this part in a new design.
PREVIEW: Device has been announced but is not in production. Samples may or may not be available.
OBSOLETE: TI has discontinued the production of the device.

(2) Eco Plan - The planned eco-friendly classification: Pb-Free (RoHS), Pb-Free (RoHS Exempt), or Green (RoHS & no Sb/Br) - please check http://www.ti.com/productcontent for the latest availability information and additional product content details.
TBD: The Pb-Free/Green conversion plan has not been defined.
Pb-Free (RoHS): TI's terms "Lead-Free" or "Pb-Free" mean semiconductor products that are compatible with the current RoHS requirements for all 6 substances, including the requirement that lead not exceed 0.1% by weight in homogeneous materials. Where designed to be soldered at high temperatures, TI Pb-Free products are suitable for use in specified lead-free processes.
Pb-Free (RoHS Exempt): This component has a RoHS exemption for either 1) lead-based flip-chip solder bumps used between the die and package, or 2) lead-based die adhesive used between the die and leadframe. The component is otherwise considered Pb-Free (RoHS compatible) as defined above.
Green (RoHS & no Sb/Br): TI defines "Green" to mean Pb-Free (RoHS compatible), and free of Bromine (Br) and Antimony (Sb) based flame retardants (Br or Sb do not exceed 0.1% by weight in homogeneous material)

(3) MSL, Peak Temp. -- The Moisture Sensitivity Level rating according to the JEDEC industry standard classifications, and peak solder temperature.

(4) There may be additional marking, which relates to the logo, the lot trace code information, or the environmental category on the device.

(5) Multiple Device Markings will be inside parentheses. Only one Device Marking contained in parentheses and separated by a "~" will appear on a device. If a line is indented then it is a continuation of the previous line and the two combined represent the entire Device Marking for that device.

Important Information and Disclaimer: The information provided on this page represents TI's knowledge and belief as of the date that it is provided. TI bases its knowledge and belief on information provided by third parties, and makes no representation or warranty as to the accuracy of such information. Efforts are underway to better integrate information from third parties. TI has taken and continues to take reasonable steps to provide representative and accurate information but may not have conducted destructive testing or chemical analysis on incoming materials and chemicals. TI and TI suppliers consider certain information to be proprietary, and thus CAS numbers and other limited information may not be available for release.

In no event shall TI's liability arising out of such information exceed the total purchase price of the TI part(s) at issue in this document sold by TI to Customer on an annual basis.

TAPE AND REEL INFORMATION

REEL DIMENSIONS

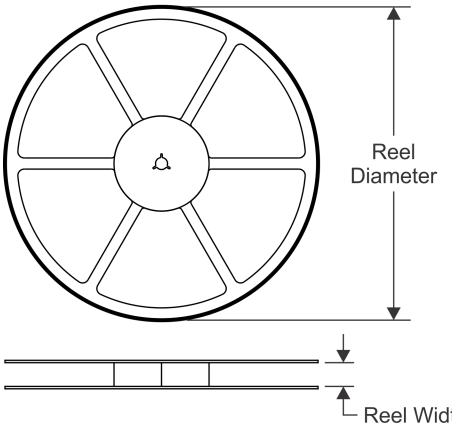

TAPE DIMENSIONS

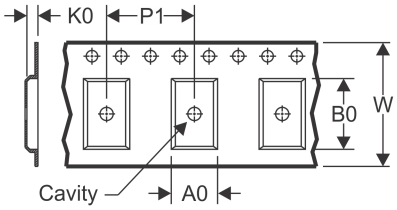

A0	Dimension designed to accommodate the component width
B0	Dimension designed to accommodate the component length
K0	Dimension designed to accommodate the component thickness
W	Overall width of the carrier tape
P1	Pitch between successive cavity centers

QUADRANT ASSIGNMENTS FOR PIN 1 ORIENTATION IN TAPE

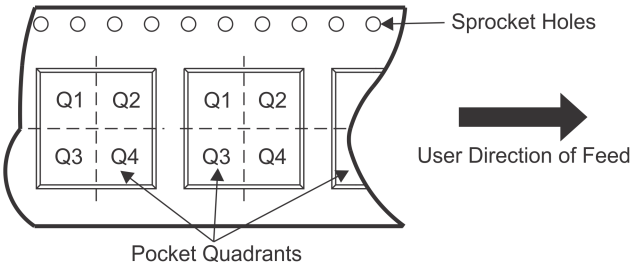

*All dimensions are nominal

Device	Package Type	Package Drawing	Pins	SPQ	Reel Diameter (mm)	Reel Width W1 (mm)	A0 (mm)	B0 (mm)	K0 (mm)	P1 (mm)	W (mm)	Pin1 Quadrant
TS3A24159DGSR	VSSOP	DGS	10	2500	330.0	12.4	5.3	3.4	1.4	8.0	12.0	Q1
TS3A24159DRCR	SON	DRC	10	3000	330.0	12.4	3.3	3.3	1.1	8.0	12.0	Q2
TS3A24159YZPR	DSBGA	YZP	10	3000	180.0	8.4	1.5	2.03	0.7	4.0	8.0	Q2

TAPE AND REEL BOX DIMENSIONS

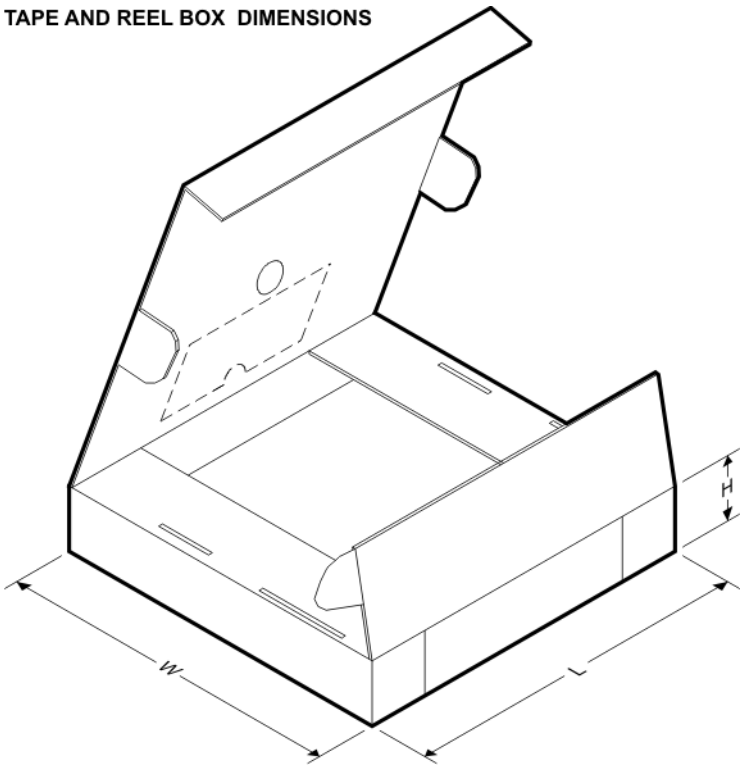

*All dimensions are nominal

Device	Package Type	Package Drawing	Pins	SPQ	Length (mm)	Width (mm)	Height (mm)
TS3A24159DGSR	VSSOP	DGS	10	2500	358.0	335.0	35.0
TS3A24159DRCR	SON	DRC	10	3000	367.0	367.0	35.0
TS3A24159YZPR	DSBGA	YZP	10	3000	220.0	220.0	34.0

IMPORTANT NOTICE

Texas Instruments Incorporated and its subsidiaries (TI) reserve the right to make corrections, enhancements, improvements and other changes to its semiconductor products and services per JESD46, latest issue, and to discontinue any product or service per JESD48, latest issue. Buyers should obtain the latest relevant information before placing orders and should verify that such information is current and complete. All semiconductor products (also referred to herein as “components”) are sold subject to TI’s terms and conditions of sale supplied at the time of order acknowledgment.

TI warrants performance of its components to the specifications applicable at the time of sale, in accordance with the warranty in TI’s terms and conditions of sale of semiconductor products. Testing and other quality control techniques are used to the extent TI deems necessary to support this warranty. Except where mandated by applicable law, testing of all parameters of each component is not necessarily performed.

TI assumes no liability for applications assistance or the design of Buyers’ products. Buyers are responsible for their products and applications using TI components. To minimize the risks associated with Buyers’ products and applications, Buyers should provide adequate design and operating safeguards.

TI does not warrant or represent that any license, either express or implied, is granted under any patent right, copyright, mask work right, or other intellectual property right relating to any combination, machine, or process in which TI components or services are used. Information published by TI regarding third-party products or services does not constitute a license to use such products or services or a warranty or endorsement thereof. Use of such information may require a license from a third party under the patents or other intellectual property of the third party, or a license from TI under the patents or other intellectual property of TI.

Reproduction of significant portions of TI information in TI data books or data sheets is permissible only if reproduction is without alteration and is accompanied by all associated warranties, conditions, limitations, and notices. TI is not responsible or liable for such altered documentation. Information of third parties may be subject to additional restrictions.

Resale of TI components or services with statements different from or beyond the parameters stated by TI for that component or service voids all express and any implied warranties for the associated TI component or service and is an unfair and deceptive business practice. TI is not responsible or liable for any such statements.

Buyer acknowledges and agrees that it is solely responsible for compliance with all legal, regulatory and safety-related requirements concerning its products, and any use of TI components in its applications, notwithstanding any applications-related information or support that may be provided by TI. Buyer represents and agrees that it has all the necessary expertise to create and implement safeguards which anticipate dangerous consequences of failures, monitor failures and their consequences, lessen the likelihood of failures that might cause harm and take appropriate remedial actions. Buyer will fully indemnify TI and its representatives against any damages arising out of the use of any TI components in safety-critical applications.

In some cases, TI components may be promoted specifically to facilitate safety-related applications. With such components, TI’s goal is to help enable customers to design and create their own end-product solutions that meet applicable functional safety standards and requirements. Nonetheless, such components are subject to these terms.

No TI components are authorized for use in FDA Class III (or similar life-critical medical equipment) unless authorized officers of the parties have executed a special agreement specifically governing such use.

Only those TI components which TI has specifically designated as military grade or “enhanced plastic” are designed and intended for use in military/aerospace applications or environments. Buyer acknowledges and agrees that any military or aerospace use of TI components which have ***not*** been so designated is solely at the Buyer's risk, and that Buyer is solely responsible for compliance with all legal and regulatory requirements in connection with such use.

TI has specifically designated certain components as meeting ISO/TS16949 requirements, mainly for automotive use. In any case of use of non-designated products, TI will not be responsible for any failure to meet ISO/TS16949.

Products		**Applications**	
Audio	www.ti.com/audio	Automotive and Transportation	www.ti.com/automotive
Amplifiers	amplifier.ti.com	Communications and Telecom	www.ti.com/communications
Data Converters	dataconverter.ti.com	Computers and Peripherals	www.ti.com/computers
DLP® Products	www.dlp.com	Consumer Electronics	www.ti.com/consumer-apps
DSP	dsp.ti.com	Energy and Lighting	www.ti.com/energy
Clocks and Timers	www.ti.com/clocks	Industrial	www.ti.com/industrial
Interface	interface.ti.com	Medical	www.ti.com/medical
Logic	logic.ti.com	Security	www.ti.com/security
Power Mgmt	power.ti.com	Space, Avionics and Defense	www.ti.com/space-avionics-defense
Microcontrollers	microcontroller.ti.com	Video and Imaging	www.ti.com/video
RFID	www.ti-rfid.com		
OMAP Applications Processors	www.ti.com/omap	**TI E2E Community**	e2e.ti.com
Wireless Connectivity	www.ti.com/wirelessconnectivity		

Mailing Address: Texas Instruments, Post Office Box 655303, Dallas, Texas 75265
Copyright © 2013, Texas Instruments Incorporated