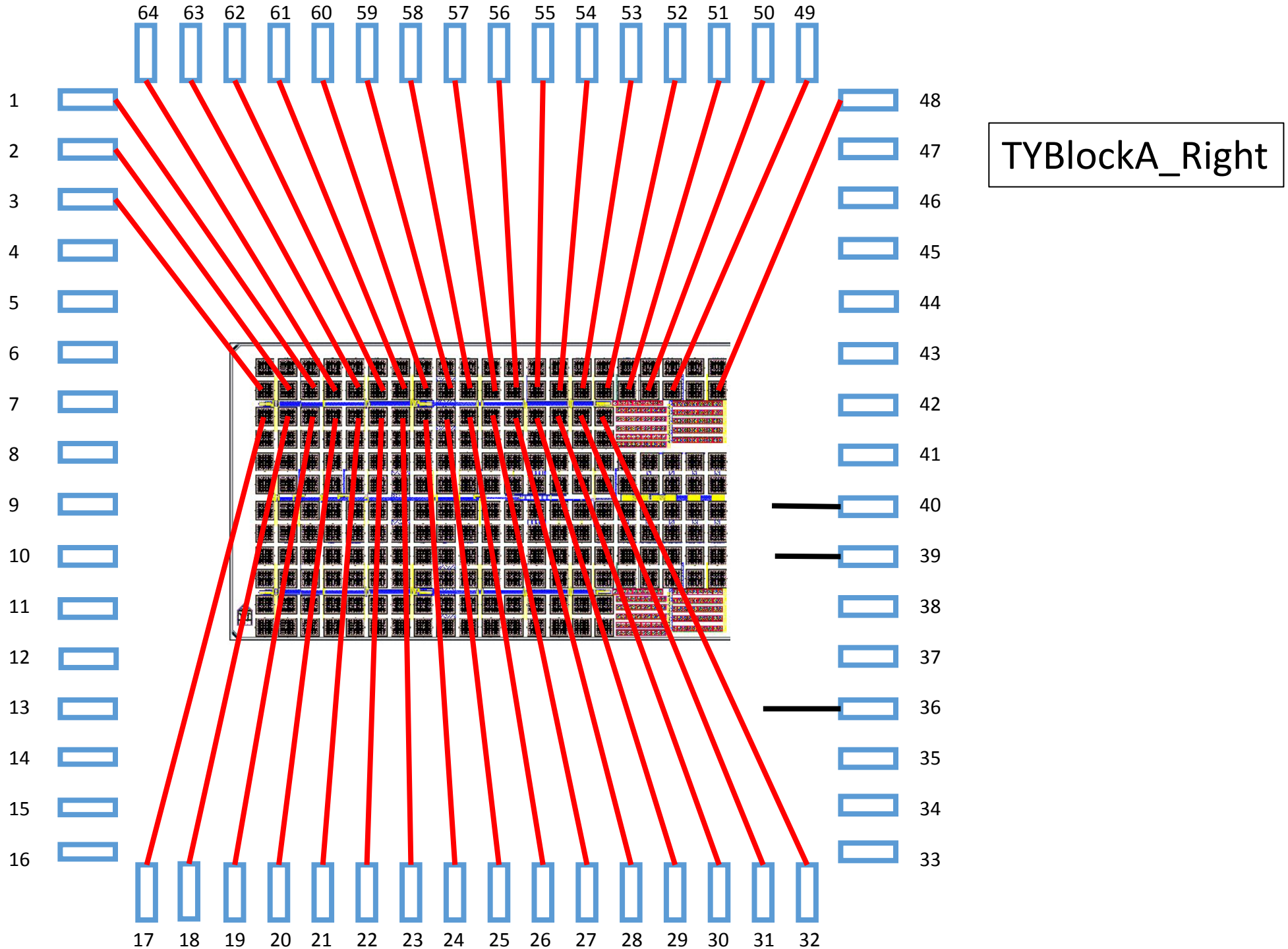
TYBlockA_Right
64 63 62 61 60 59 58 57 56 55 54 53 52 51 50 49
1 2 3 4 5 6 7 8 9 10 11 12 13 14 15 16
48 47 46 45 44 43 42 41 40 39 38 37 36 35 34 33
17 18 19 20 21 22 23 24 25 26 27 28 29 30 31 32

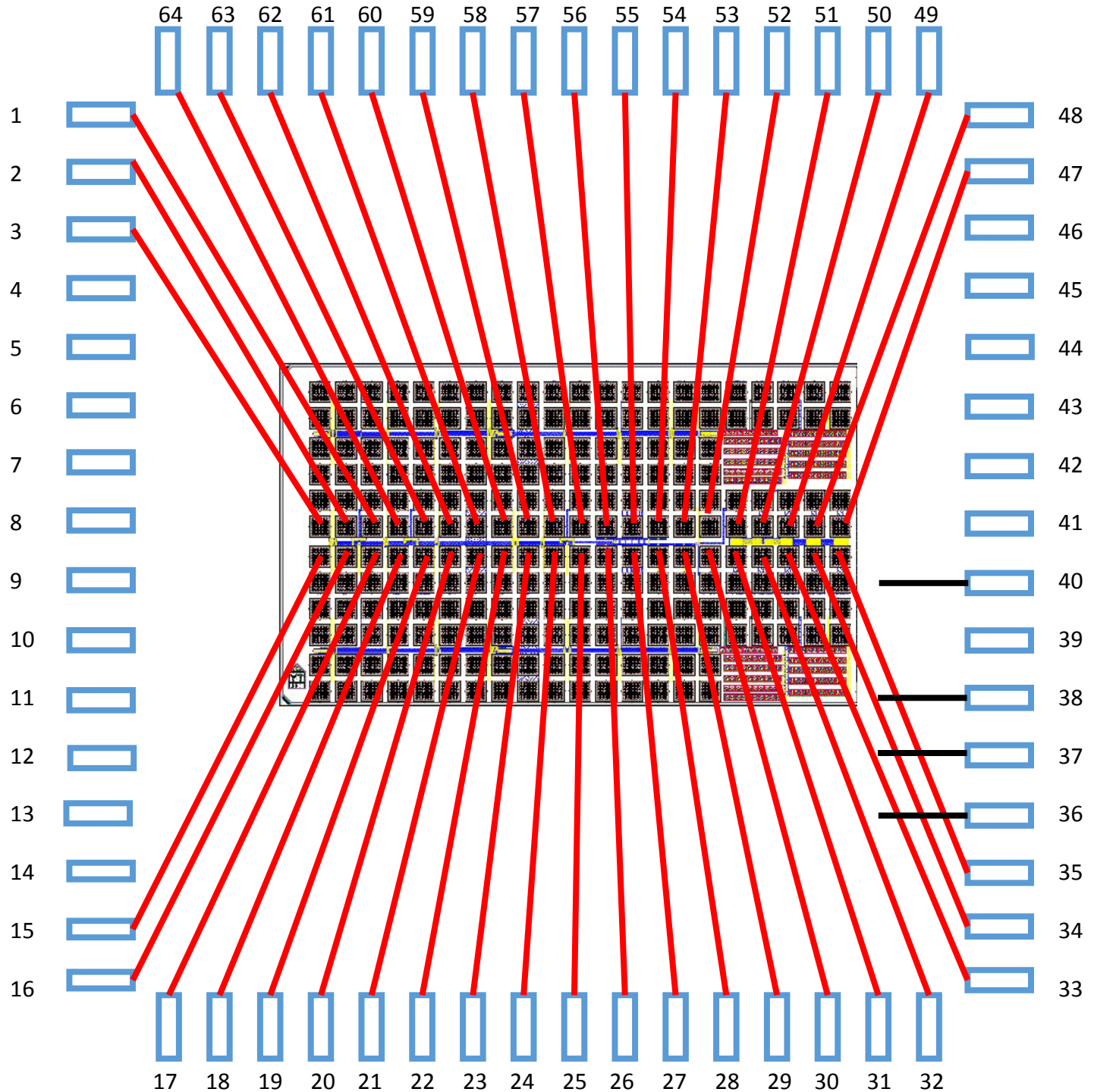

TYBlockB_Right

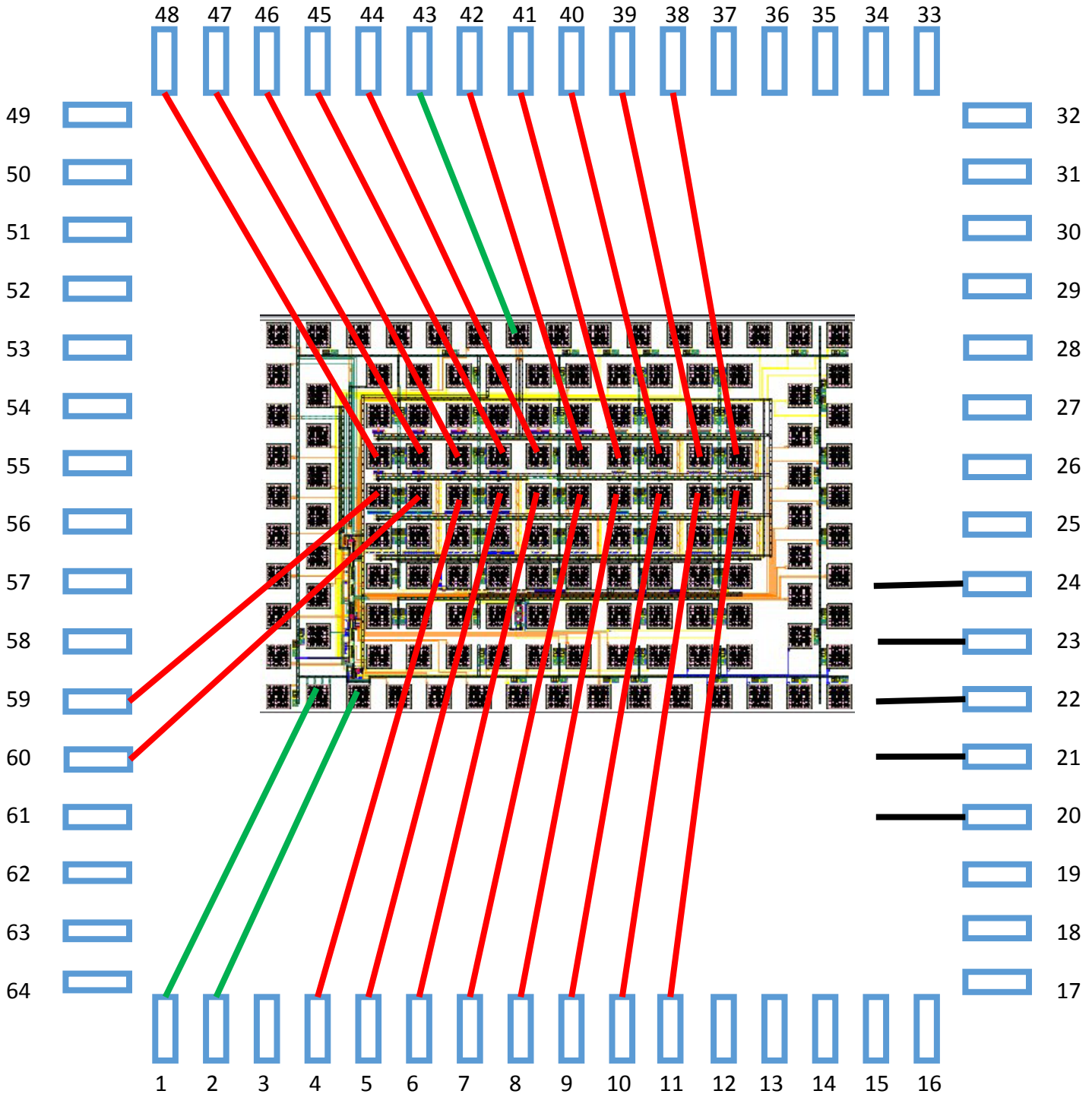

TXBlock_Right_
NMOS1

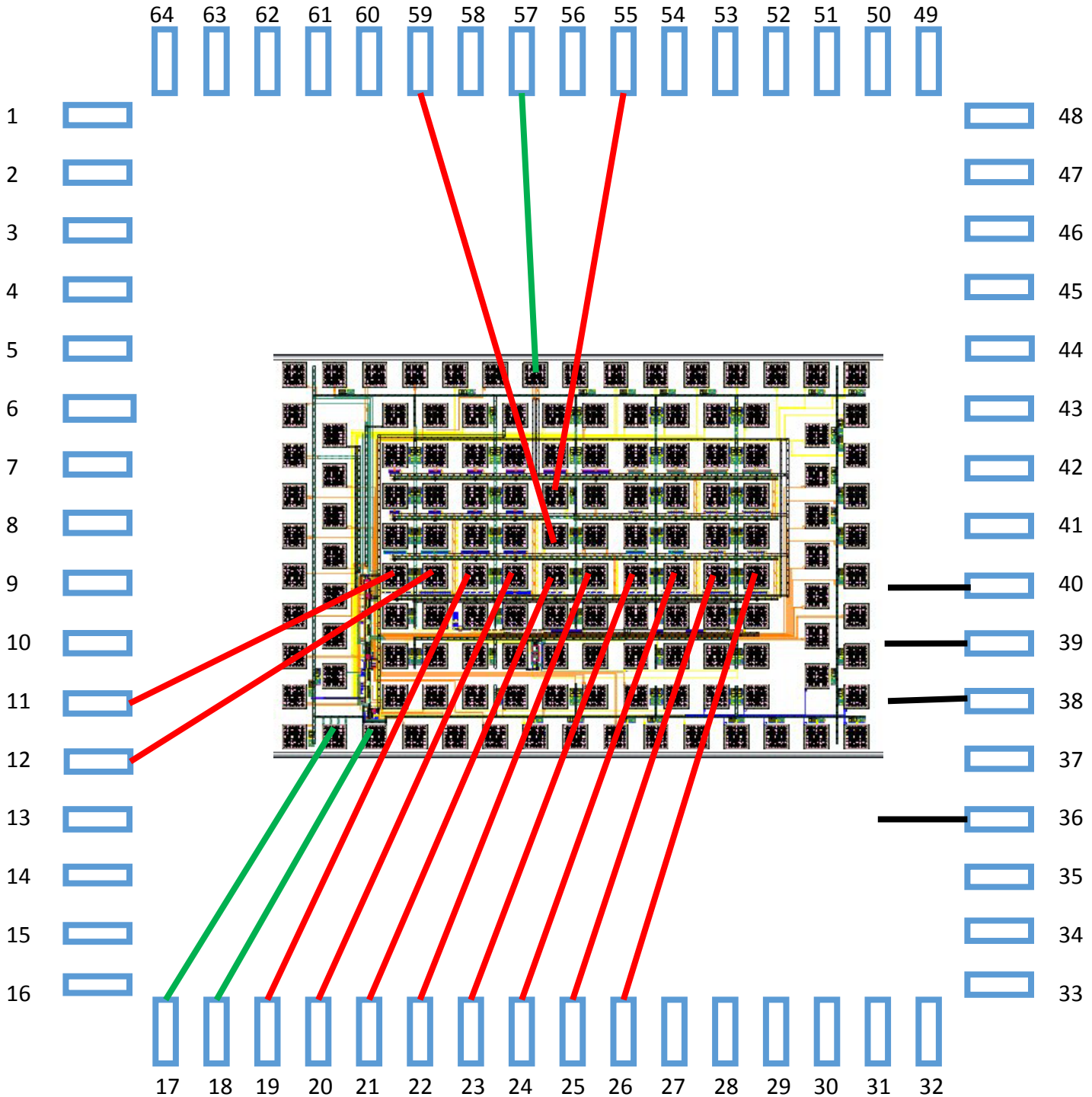

TXBlock_Right_
NMOS2

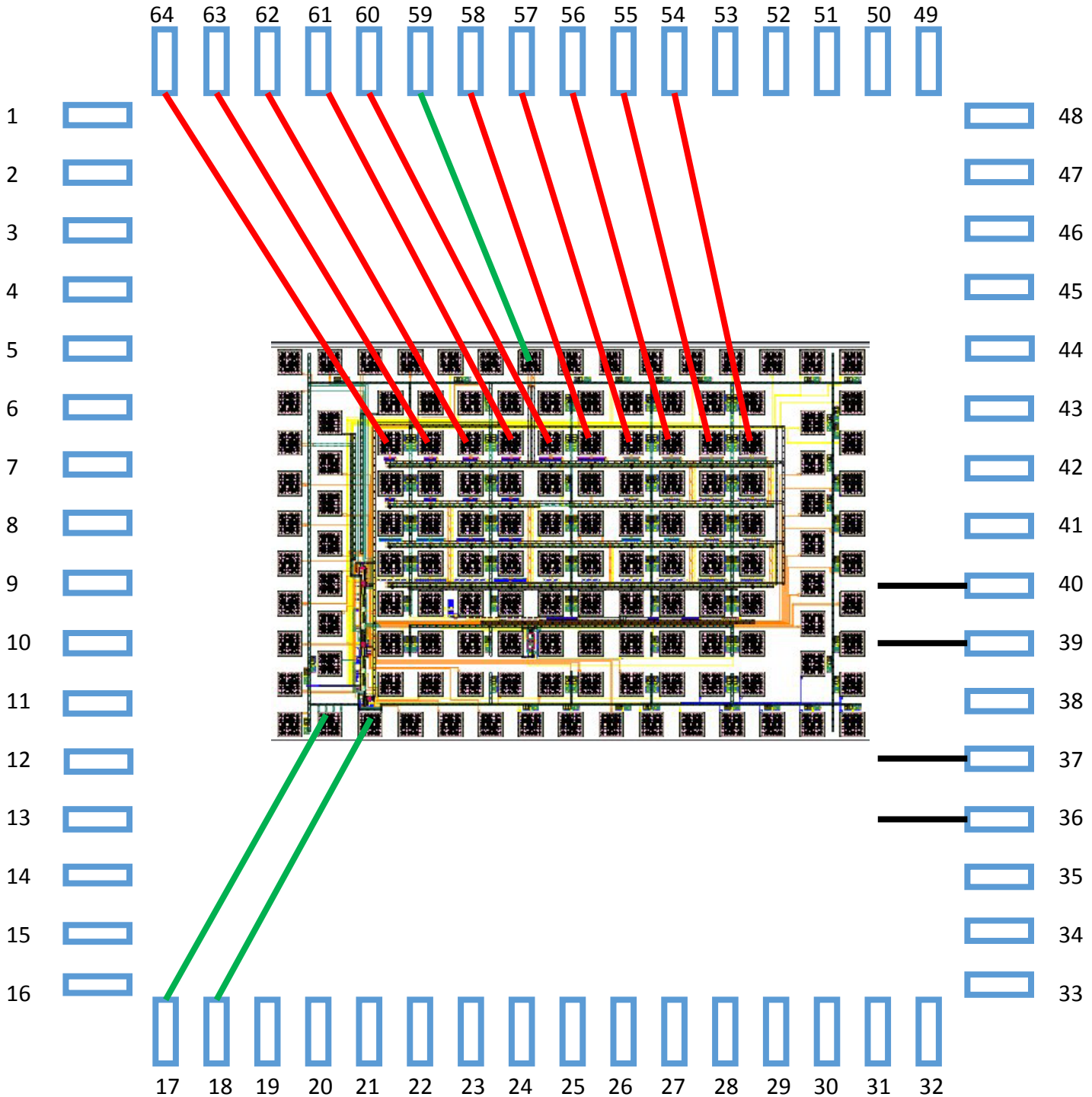

TXBlock_Right_PMOS