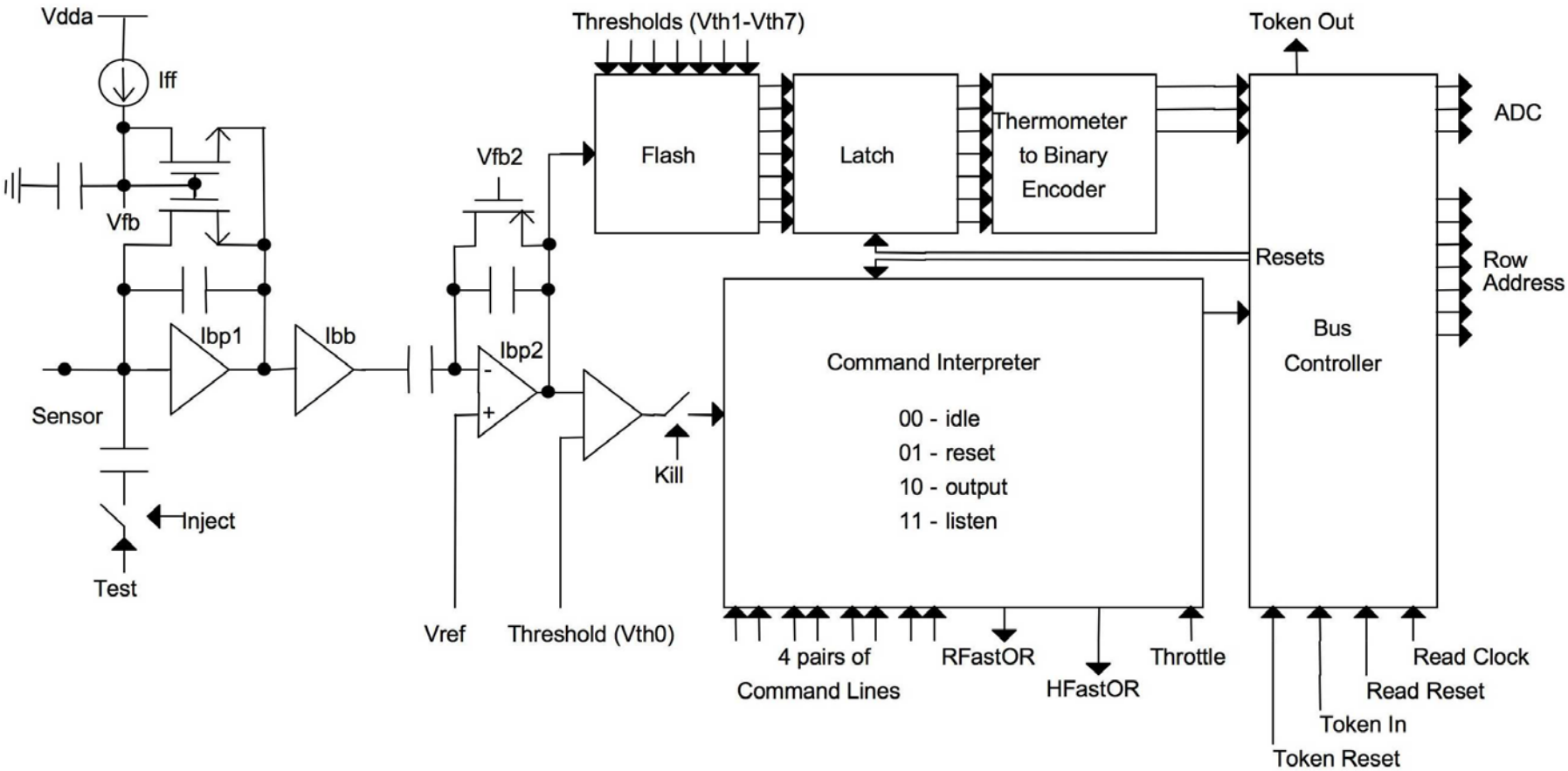
Vdda
Iff
Vfb
Ibp1
Ibb
Sensor
Inject
Test
Vfb2
Ibp2
Vref
Threshold (Vth0)
Kill
Thresholds (Vth1-Vth7)
Flash
Latch
Thermometer
to Binary
Encoder
Token Out
ADC
Resets
Row
Address
Bus
Controller
Command Interpreter
00 - idle
01 - reset
10 - output
11 - listen
4 pairs of
Command Lines
RFastOR
HFastOR
Throttle
Read Clock
Read Reset
Token In
Token Reset